Index

History	Page 4
Product Offerings	Page 11
Chassis Electrics	Page 33
OM642	Page 145
Transmission	Page 227
Chassis	Page 235
ESP	Page 251
Climate Control	Page 273
SRS	Page 313
Body	Page 319
M272	Page 325

Disclaimer

© Copyright 2009 Mercedes-Benz USA, LLC (MBUSA), all rights reserved. May not be reproduced, stored or transmitted in whole or part without prior written consent of MBUSA. Intended for training purposes only. Every effort has been made to make the information contained herein as complete and accurate as possible at the time of publishing. The information is provided on an "as is" basis, has not been updated and MBUSA disclaims any responsibility to update the information. The information is subject to change without notice. The authors and publishers including MBUSA, its employees, and/or vendors shall have neither liability or responsibility to any person or entity with respect to any loss or damage arising from the information or reliance upon the information.

History

The first MB – Sprinter came in 1994 with a 4-cylinder petrol- (M111) and two Diesel engines:
OM601, 4-cylinder with mech. in-line-pump and OM602, 5-cylinder direct injection, with electronic controlled distributor pump.

This was the first van with a CAN-Bus, - only between the DAS and engine control unit.

The internal designation is "T1N", the successor of the former model "T1".

The Baumuster (Bm) of this vehicle is
901.0/3/4 – 904.0/3/4

Calendar Year 2000

In 2000 there was a face-lift as you can see.

The important technical modifications were the CDI engines OM611 and OM612 and a network system via high speed CAN (Motor CAN Bus).

130,000 units were sold in this year.

The Baumuster (Bm) of this vehicle is **901.6 - 905.6**

Calendar Year 2001

In 2001 there was the Sprinter market launch in USA.
The brand name was not Mercedes-Benz but Freightliner.

The available engine was the OM612, the 5 cylinder CDI.

Calendar Year 2003

In 2003 after the merger of Daimler and Chrysler the Sprinter was also available in another version.

The same vehicle but the brand was Dodge.

In 2004 the engine was changed. The OM612 became OM647. A very similar engine but with a modified CDI system and exhaust gas recirculation.

Calendar Year 2006

2006 Mercedes-Benz had in Europe the market launch of the successor of the T1N which is called NCV3 (New Concept Van).
This was a newly developed van which is technically closer to the cars than it's predecessor. We had new engines, an extended network system and a lot of new features.

The Baumuster (Bm) is **906.**

Calendar Year 2007

2007 the new Sprinter Bm906 came also for NAFTA states (Frightliner and Dodge).

The available engines were:

- OM642, 6 Cylinder v-engine with CDI

  and, only up to 2008 the

- M272, 6 cylinder petrol v-engine.

Calendar Year 2010

With MY 2010 there are some modifications.
The most important one is on the engine OM642. Due to exhaust regulations the DEF system is integrated.

From 2010 the Sprinter is distributed by select Mercedes-Benz and Freightliner dealers.

Product Offerings

Welcome to the New Sprinter

Product offerings – 4 classes, 10 models

Cargo Van

Variations:
2500 Cargo Van (Standard Roof / High Roof)
3500 Cargo Van (High Roof)

Dimensions:
Wheelbase: 144.3" / 170.3"
Overall Length: 232.5" / 273.2"
Overall Height: 96.3"/107.5"
Engine: 3.0-L V6 Turbo Diesel Engine
5 Speed Automatic Transmission
Base Curb Weight: 5081 lbs - 6085 lbs

Extended Cargo Van

Variations:
2500 Cargo Van Extended (High Roof)
3500 Cargo Van Extended (High Roof)

Dimensions:
Wheelbase: 170.3"
Overall Length: 289.2"
Overall Height: 107.5"
Engine: 3.0-L V6 Turbo Diesel Engine
5 Speed Automatic Transmission
Base Curb Weight: 5678 lbs - 6196 lbs

Passenger Van

Variations:
2500 Passenger Van (High Roof)

Dimensions:
Wheelbase: 144.3" / 170.3"
Overall Length: 232.5" / 273.2"
Overall Height: 107.5"
Engine: 3.0-L V6 Turbo Diesel Engine
5 Speed Automatic Transmission
Base Curb Weight: 5820 lbs / 6228 lbs

Chassis Cab

Variations:
3500 CAB Chassis

Dimensions:
Wheelbase: 144.3" / 170.3"
Overall Length: 239.6" / 269.5"
Overall Height: 95.5"
Engine: 3.0-L V6 Turbo Diesel Engine
5 Speed Automatic Transmission
Base Curb Weight: 4761 lbs / 4851 lbs

Baumuster

Translation

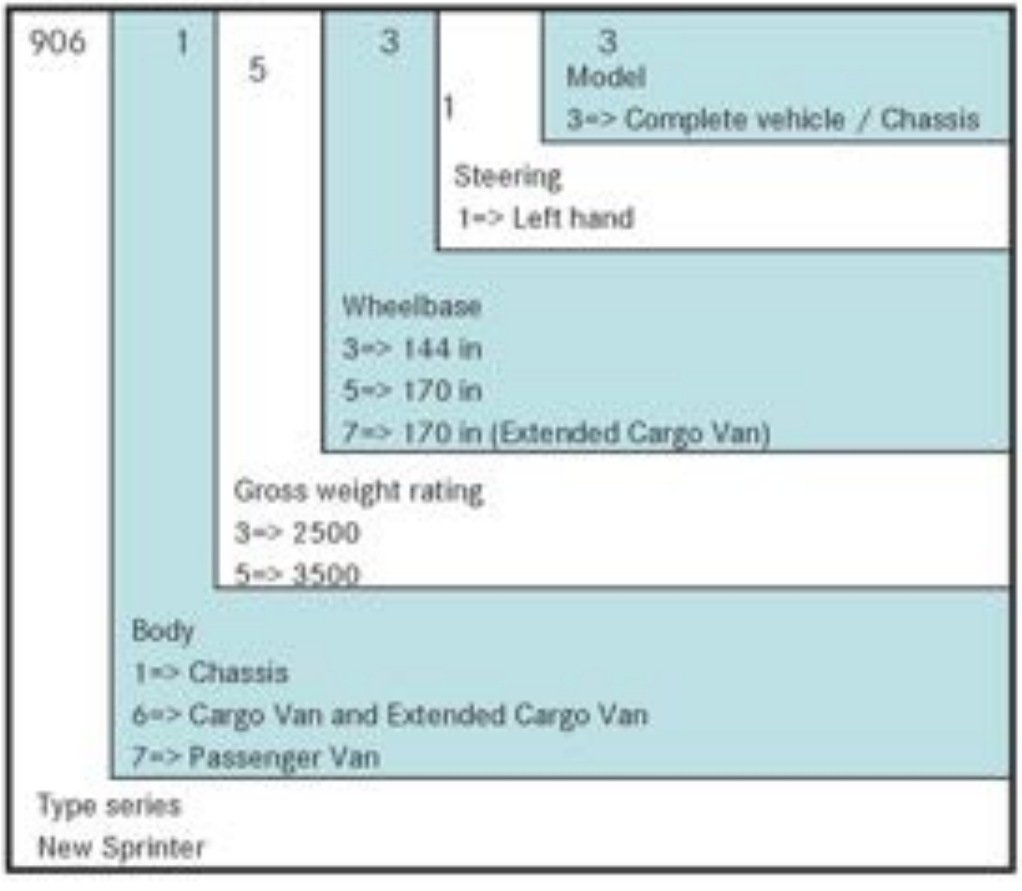

Code

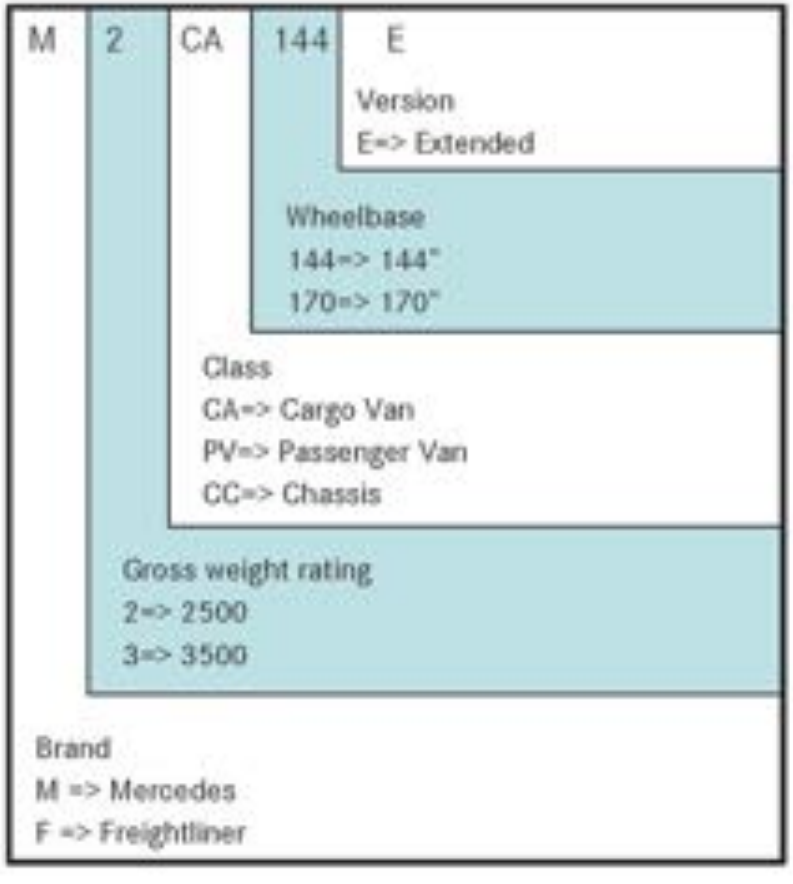

Overview

	Typ	Code Mercedes	Code Freightliner	Body	Baumuster	Wheelbase	Overall Length	Overall Height	Base CW	GVWR*
	2500	M2CA144	F2CA144	Std. Roof	90663313	144"	232.5"	96.3"	5081 lbs	8550 lbs
		M2CA170	F2CA170	High Roof	90663513	170"	273.2"	107.5"	5545 lbs	8550 lbs
	3500	M3CA144	F3CA144	High Roof	90665313	144"	232.5"	107.5"	5695 lbs	9990 lbs [1]
		M3CA170	F3CA170	High Roof	90665513	170"	273.2"	107.5"	6085 lbs	9990 lbs [1]
	2500	M2CA170E	F2CA170E	High Roof	90663713	170"	289.2"	107.5"	5678 lbs	8550 lbs
	3500	M3CA170E	F3CA170E	High Roof	90665713	170"	289.2"	107.5"	6196 lbs	9990 lbs [1]
	2500	M2PV144	F2PV144	Std. Roof	90673313	144"	232.5"	96.3"	5754 lbs	8550 lbs
		M2PV170	F2PV170	High Roof	90673513	170"	273.2"	107.5"	6228 lbs	8550 lbs
	3500	M3CC144	F3CC144	Std. Roof	90615313	144"	239.6"	96.5"	4761 lbs	11030 lbs
		M3CC170	F3CC170	Std. Roof	90615513	170"	269.5"	96.5"	4851 lbs	11030 lbs

[1] Optional: GVWR extension up to 11030 lbs

* GVWR= Gross vehicle weight rating

Special Equipment

The development and promotion of body builders or body up-fits are integral factors to the success of Sprinter sales in the USA & Canada.

About 70–80% of Sprinters sold are being modified or up-fitted with special equipment.

The sole product responsibility for the Sprinter lies with the head of Van Development (Dr. Sascha Paasche), as such Sprinter Engineering & Compliance division of Mercedes-Benz USA has the leading role providing technical, Engineering & Compliance support to Sprinter up-fitters, dealers and customers.

Special Equipment

More than 80,000 up-fitted Sprinters are currently on the roads in the USA & Canada. Here is a brief list of very successful applications:

- Campers (RV): Class A (Cowl-Chassis), Class B (Van) & Class C (Cutaway)
- Expediters
- Shuttles: Integral bodies (Cutaway) & van
- Ambulance: Integral box & van
- Vocational vehicles: Service bodies, van bodies, platform bodies, crane bodies, shelving, etc.
- Refrigeration
- Mobility
- Armoured vans
- Custom conversions: Mobile office, dog groomers, luxury limousine, mobile repair shops, mobile-X ray units, etc.

Sprinter Shuttle Conversions

- Van based shuttle
- Integral shuttle body

SPRINTER

Learning & Performance

Sprinter Ambulance Conversions

Sprinter Vocational Vehicles

- Service body
- Van body

Sprinter Vocational Vehicles

- Custom shelves & interior equipment
- Service body

Sprinter Refrigeration Vehicles

Sprinter Armored Vehicles

- Money transporter
- Armoured SWAT team command.

Sprinter Custom Conversion Vehicles

- Mobile office insurance adjuster.
- Mobile store for eye glasses.
- Golf event van

Sprinter Custom Conversion Vehicles

- Mobile broadcast vehicle

Sprinter Custom Conversion Vehicles

- Mobile X-ray unit
- Scans buildings & vehicles for weapons or explosives

Sprinter Custom Conversion Vehicles

Sprinter Custom Conversion Vehicles

Acronyms / Terms

- CCC – Cargo Carrying Capacity
- CW – Curb Weight
- GAWR – Gross Axle Weight Rating
- GCWR – Gross Combination Weight Rating (includes towed vehicle)
- GTWR – Gross Trailer Weight Rating
- GVWR – Gross Vehicle Weight Rating
- SCWR – Sleeping Capacity
- UVW (Base CW) – Unloaded Vehicle Weight

Chassis Electrics

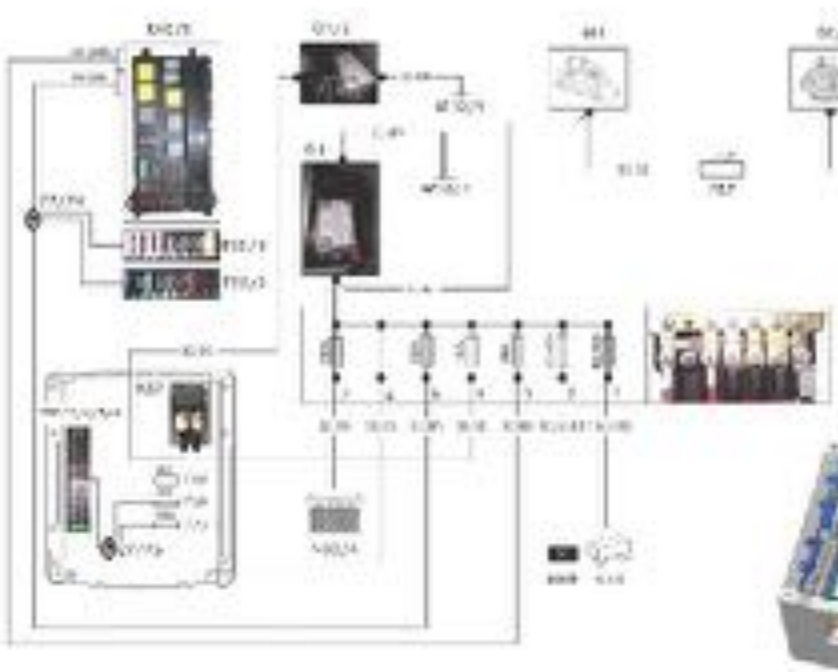

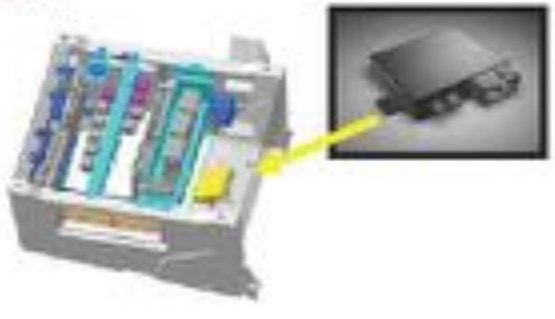

Voltage Supply

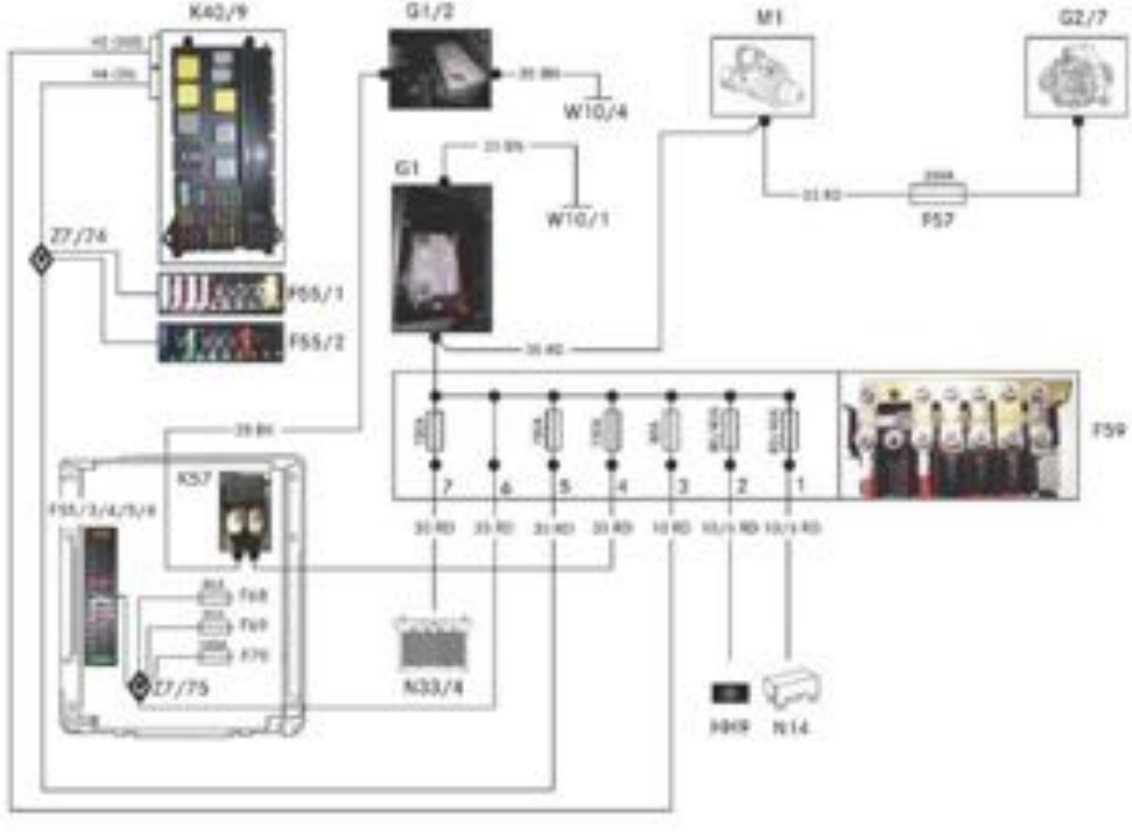

Legend

M1	Starter
G2/7	Alternator
G1	Starter battery
G1/2	Additional battery
K40/9	Fuse and relay block SRB
K57	Battery cutoff relay
N33/4	el. PTC heater booster
H99	Air conditioning (additional fan)
N14	Glow time output stage

Power Supply

- Main battery
  - Located left cab floor
  - Tested with Midtronics tester
- Additional battery
  - Located left engine compartment
  - Factory or add on option
  - Connected to starter battery via cut off relay
  - 2 types
    - Traction battery up to 08/2008
    - Normal starter battery from 08/2008

Note: Cold cranking amps and standard not listed on traction battery can not be tested with Midtronics tester

Main battery

Traction battery

Jump Starting / Charging

- Traction battery designed for smaller currents over long time periods
  - Not suitable for jump starting another vehicle
  - Connection to main battery open via relay when main battery power is low
- Jump starting / charging permitted at terminal points on air filter housing (+) and fender liner (-) for main battery

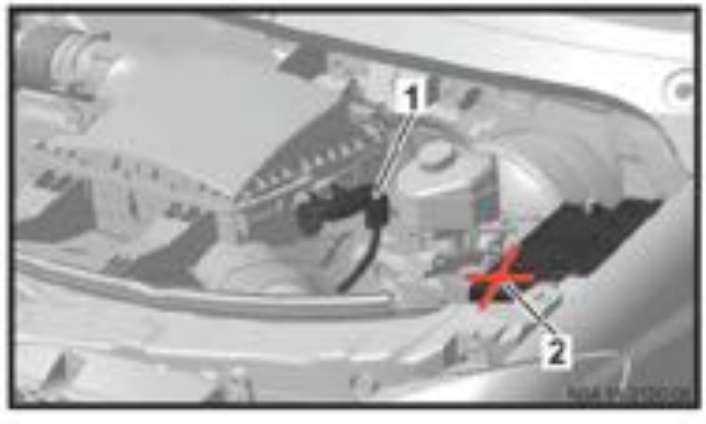

1 Terminal point (+)
2 Traction battery terminal

Main Battery Switch

- Main battery ground point disconnect
  - Allows for quick interruption of voltage supply
- Located to the right of the accelerator pedal
- Normalizations after disconnect
  - Clock
  - Sliding roof

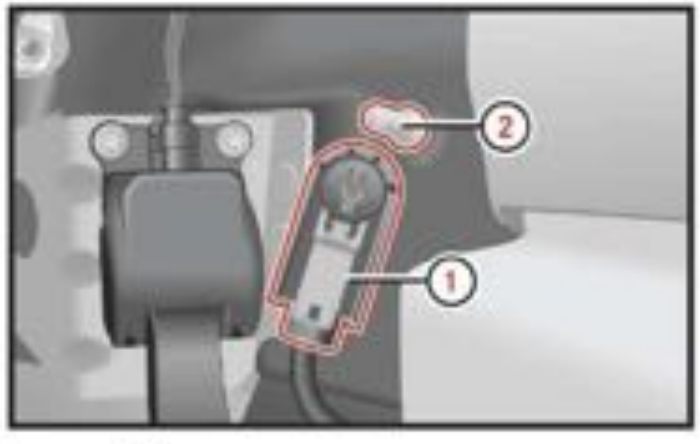

1 Main battery switch
2 Ground stud

300 Amp Safety Fuse

- 300 amp fuse in Batt + connector lead between starter and alternator for greater safety in accidents
- Located in wiring harness at top of bell housing area
- If fuse is defective, the complete B+ lead must be replaced

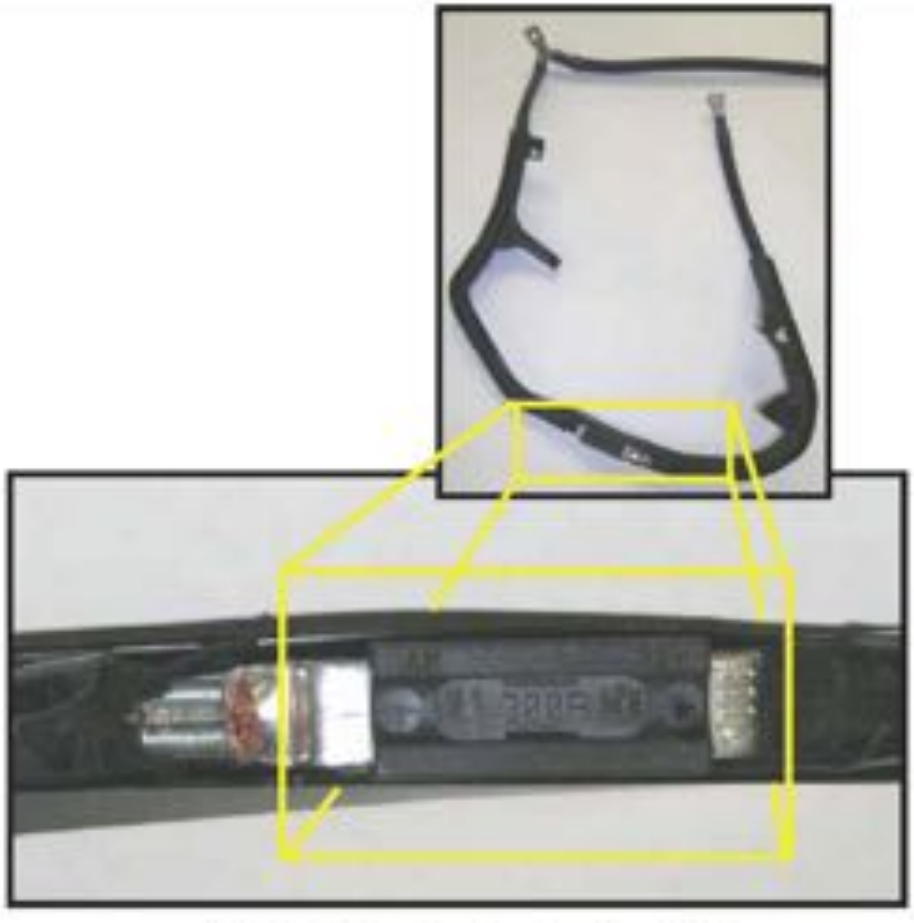

B+ line battery-starter-alternator with fuse

F59 Prefuse Box

- High current consumer protection
- Located next to starter battery
- Open fuse slot to be utilized by upfitter body modifiers for additional power circuits

F59	
/1- Glow output stage/secondary air pump	60/40A
/2- Air conditioning additional fan	80/40A
/3- SRB	80A
/4- Additional battery cutoff relay	160A
/5- Z7/74 Cockpit	150A
/6- Z7/75 Seat box	bridge
/7- PTC heater booster	150A

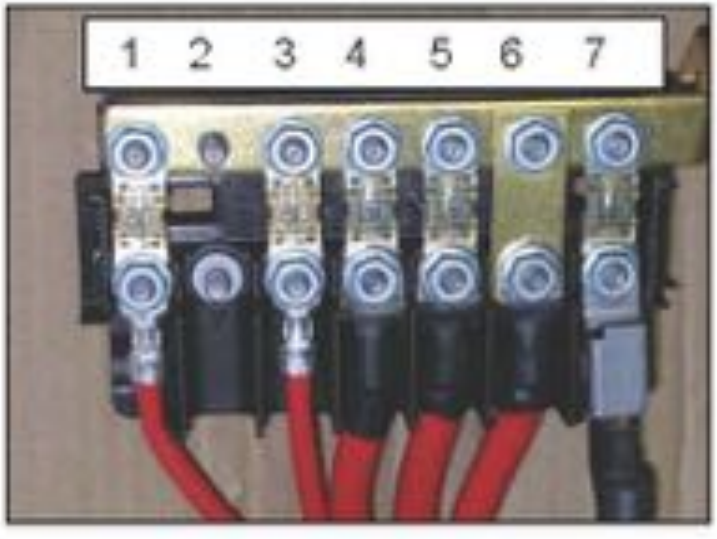

Voltage Supply

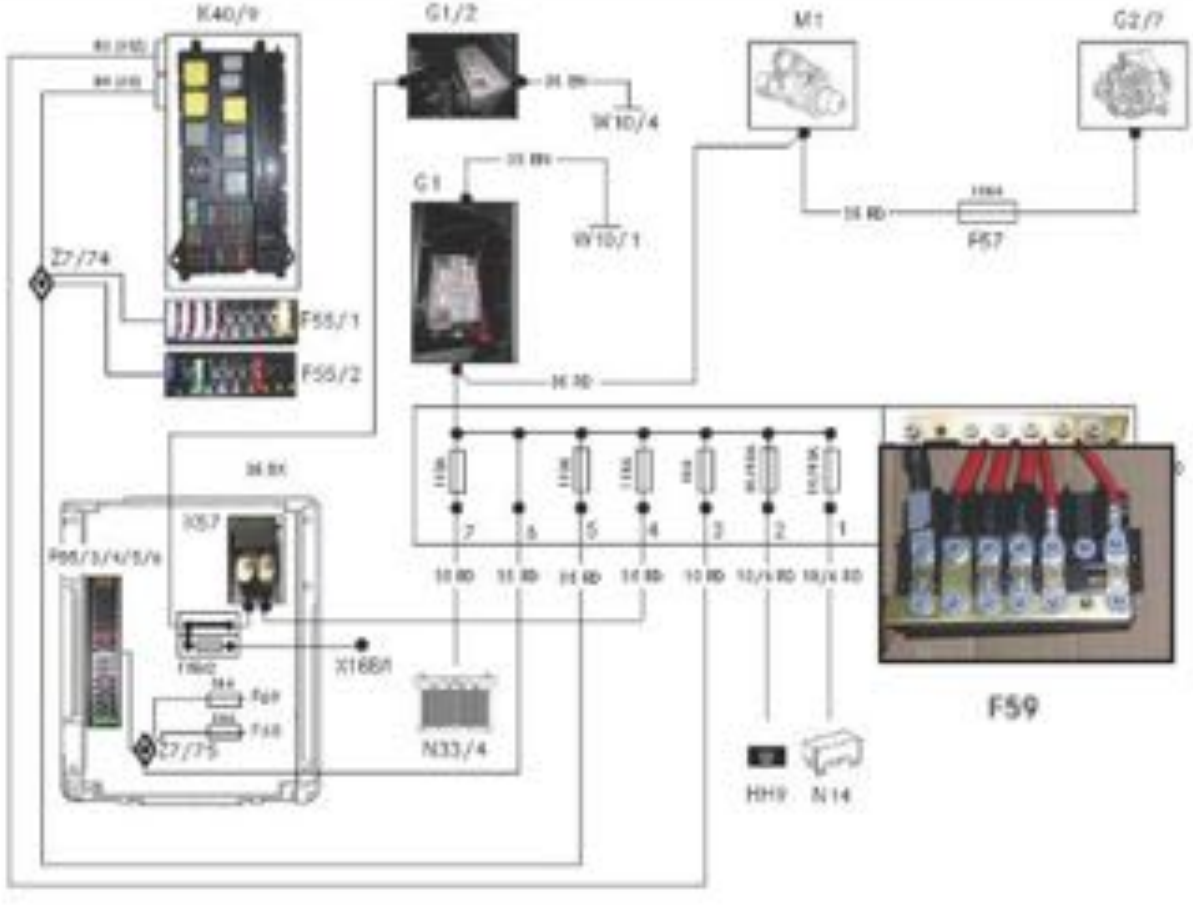

Legend

M1	Starter
G2/7	Alternator
G1	Starter battery
G1/2	Additional battery
K40/9	Fuse and relay block
K57	Battery cut-off relay
N33/4	El. PTC heater booster
HH9	Air conditioning (additional fan)
N14	Glow time output stage
F 57	Alternator fuse B+
F 59	Prefuses
F 59/2	Mega fuse
F55/1-6	9-fold fuse holder
F68-69	Maxi fuse fuses for special equipment
X168/1	Cargo lift connector

As of MY2007

Battery Cutoff Relay for Auxiliary Battery

- Located under drivers seat
- Connect additional battery to F59 prefuse box
- Controlled by terminal 1 of auxiliary electrical terminal strip (X145/1)
  - Power with engine running only
- Relay ground located under driver seat

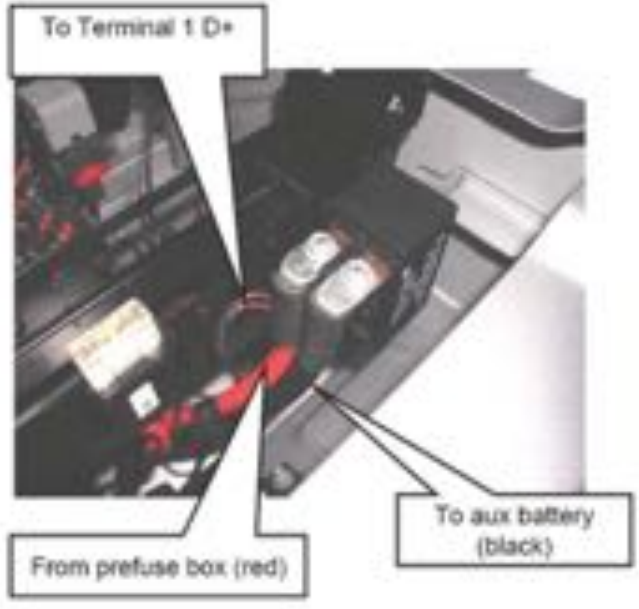

1 Ground point

Auxiliary Electrical Consumer Terminal Strip (X145/1)

- Option code EK1
- Additional electrical components must be connected using this strip
- Located under driver seat
- 3 terminals with different power inputs

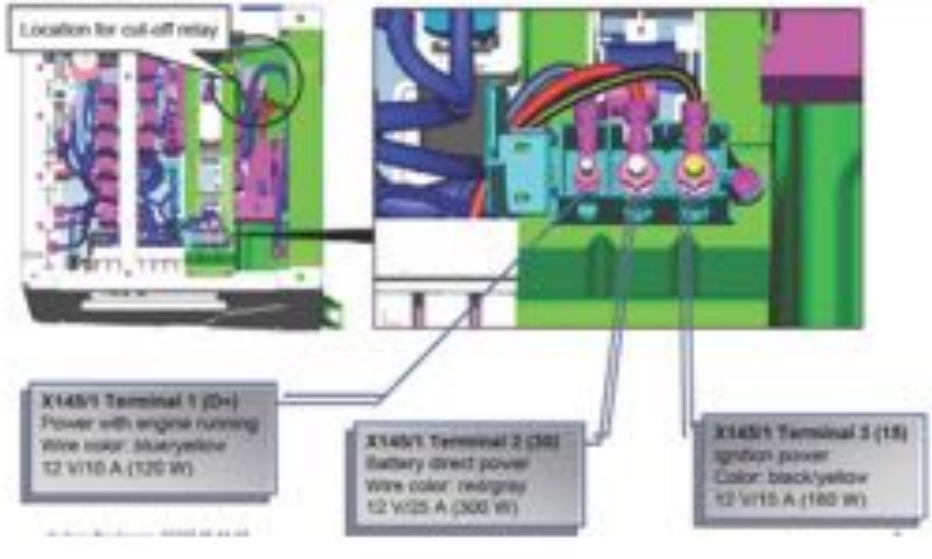

Body Builder Electrical Connectors

- Connection points for fuses and relays to be used by vehicle upfitters provided on side of drivers seat in F55/4 fuse box

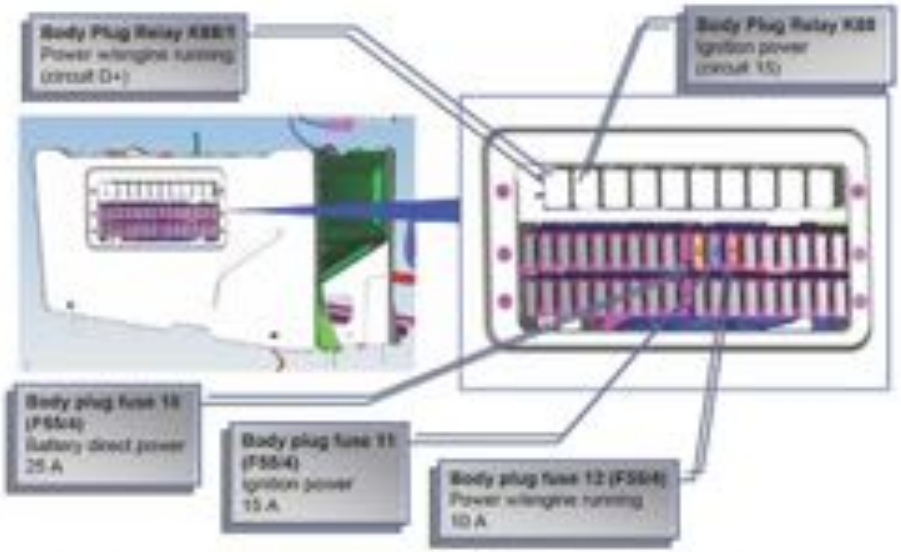

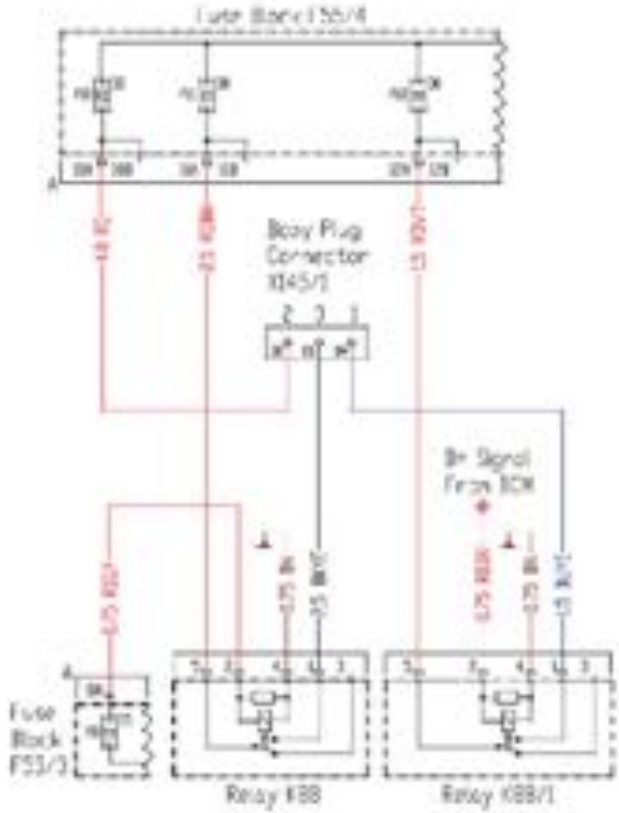

Note: reference only, consult specific vehicle information

Body Builder Electrical Connectors

- Additional connection points for upfitters located under drivers seat

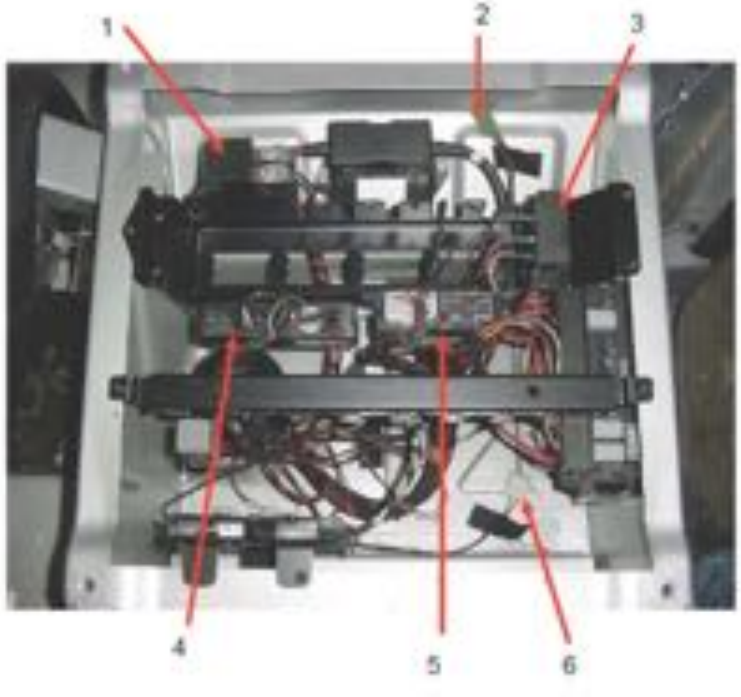

1- cut off relay aux battery

2- connector for aftermarket trailer brake control module

3- EK1 connector for body builder

4- trailer control module with 4 connectors

5- PSM with white and grey connector

6- 3rd brake light preWire for 1.8W LED light (black/yellow)

6- clearance/ident. light preWire (red/yellow)

6- ground (brown)

Front Signal Acquisition and Actuation Module (SAM)

- Located left side of dash under headlight switch
- Only 1 SAM on vehicle
- 4 variants
- Replacement SAM only available in High line

Min version (standard cab)	
Discrete inputs	Discrete outputs
• Front passenger door power window switch • Exterior light switch • Stop lamp switch • Backup switch (manual transmission) • Front passenger power window switch • Parking brake • Brake lining wear • Coolant, washer fluid, and brake fluid level • Fuel tank sensor • Ambient temperature • Passenger door CL acknowledgment • Power supply • Alternator D+ (L) EURO 3 without LIN	• Exterior lights with lamp check (backup lights with warning buzzer 2-stage) • Standard front interior lights • Switch illumination • Passenger door central locking • Front passenger door power window • Front wipe-/wash system and headlamp • Horn (only with MRM)

Low (standard panel van)	Mid	High
Min and: • Right sliding door • Hinged rear door • 3rd brake lamp • Rear lighting	Low and: • Rain-/light sensor • Front fog lamps • Headlamp cleaning • Rear wipe-/wash • Rear window defroster • D+ relay • EDW1 • Motion sensor • Sliding door/hinged door (crewcab) left • Auxiliary turn signal module	Mid and: • Electric vent windows • EDW2 • Xenon headlamp • Multipurpose vehicle convenience interior light • Windscreen heater

Fuse and Relay Block

- Connected to Front SAM
- Bracket with 2 additional fuse blocks attached
  - F55/1 fuses 1-9
  - F55/2 fuses 10-18

Legend

1 SRB K40/9
2 SRB fuse K40/9 f...
3 SRB relay K40/9 k...
4 Fuse blocks F55/1 and F55/2
5 SAM

Drivers Seat Pedestal Electrical Components

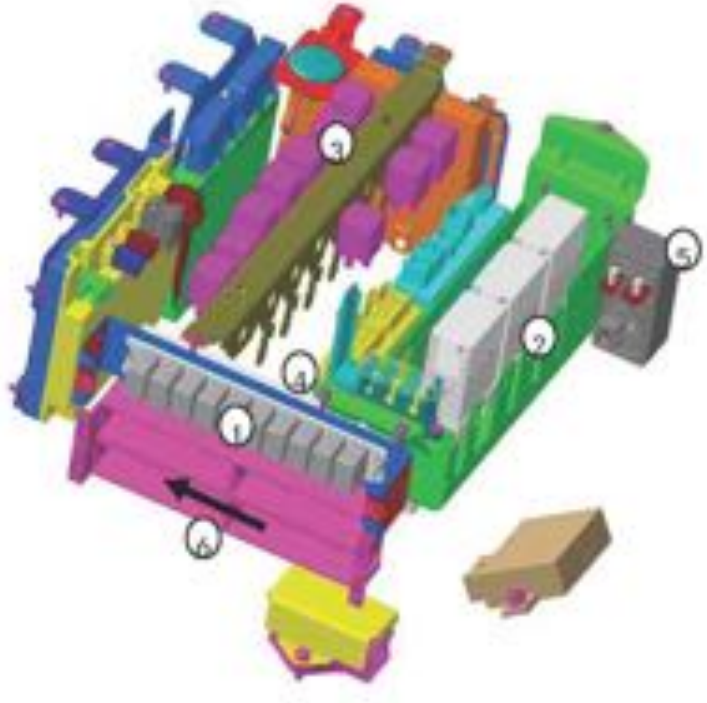

Up to 3/2009

Legend:

1 Fuse blocks F55/3, F55/4, F55/5, F55/6
2 Maxi-fuse fuses for special equipment:
F68 80 A Windshield heater
F69 50 A High-performance air conditioning (roof)
3 Cube relay
4 Micro relays
5 Battery cut-off relay
6 Direction of travel

Drivers Seat Pedestal Electrical Components

1 Parktonic
2 ETC
3 Keyless entry (not available for USA)
4 AAG
5 PSM
6 TPM
7 SCR

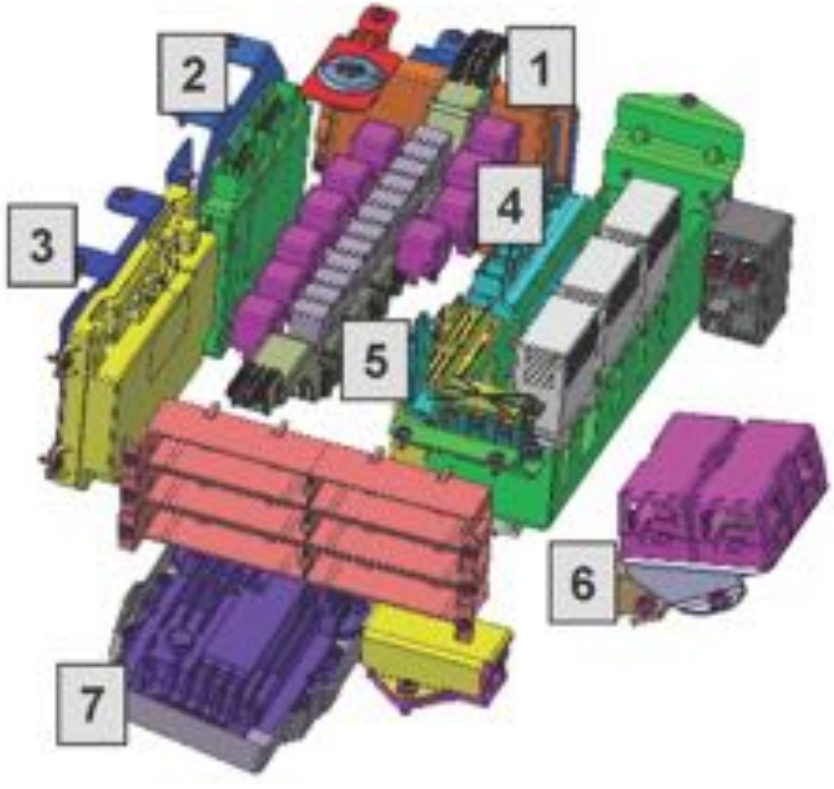

3/2009 →

Energy Chain

- Specially designed cabling to move with the sliding door
- Carries electrical wiring for sliding door, door contacts and speaker

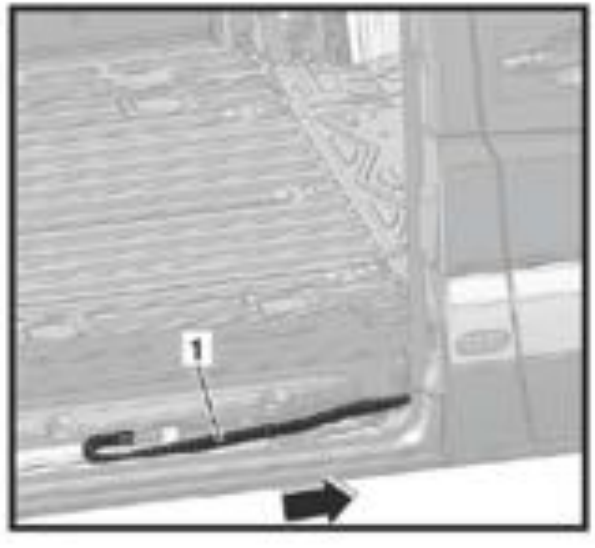

1 Energy chain
Arrow = front of vehicle

Control Units

Overhead Control Panel (OCP)

- Lamp on command via SAM from door contact switch
- OCP with anti-theft alarm (ATA)
  - Incorporates interior motion sensor and off switch
  - Interior CAN component
  - Included on all vehicles with ATA, rain/light sensor or tilting roof
- Standard OCP
  - Not networked
- All lamps are switched off by SAM after 20 minutes

Overhead control panel with anti-theft alarm system II

Overhead control panel

Upper Control Panel (UCP)

- CAN B component
- Currently 4 variants
- Unused switches covered with neutral panel
- Heated front seat switches are hard-wired (not CAN signals)

Trailer Module (AAG)

- Special module for controlling trailer illumination
- Located in the drivers seat box
- Connection for aftermarket trailer brake control module provided under driver seat
- Controls
  - Function of the lamps
  - Checking the circuit for opens and shorts

Steering Column Module (SCM)

- Located on the jacket tube of the steering column
- Variant 1:
  - Simplest version
  - Contains
    - steering column switch (without/with rear wiper)
    - clock spring contact, establishes electrical connection to the steering wheel (airbag and horn button).
- Voltage-coded signals of the steering column switch are discretely conducted to the EIS [EZS] control unit
- This version of the steering column module (without electronics and CAN) is only possible if no steering angle sensor (no ESP), no multifunction steering wheel and no cruise control are installed.

Steering column module with cruise control

Steering Column Module (SCM)

- Variant 2:

The considerably more frequent version with steering angle sensor (ESP) always has separate electronics with a connection to the M-CAN. The signals from the multifunction steering wheel, horn button, steering column switch and cruise control switch are forwarded as CAN messages.

Instrument Cluster (IC)

2 variants

- High line
  - Separate analog style fuel gauge
  - Additional message display functionality
- Low line
  - Limited displace functionality
  - Additional indicator lights

1 Instrument cluster in vehicles without steering wheel buttons
2 Instrument cluster in vehicles with steering wheel buttons
3 In vehicles without steering wheel buttons
- Change standard display
- Select menus
4 In vehicles with steering wheel buttons:
Inspect engine oil level
5 Reset button
6 Speedometer with warning and indicator lamps
7 Warning and indicator lamps
8 Display in vehicles without steering wheel buttons
9 Display in vehicles with steering wheel buttons
10 Tachometer with warning and indicator lamps
11 Instrument illumination lighter/darker
12 Display for tank capacity with
- Fuel reserve warning lamp
- Tank cap position display

Resetting of Maintenance Interval

- Currently not available via SDS
- High line cluster Workshop Menu access
  - Ignition "on"
  - Arrow button up until "Service scope in XXX" appears
  - Press "O" button on IC and hold, release after the beep
  - Press lower left steering wheel button "Menu back" once

1 high line cluster display
2 +/- button
3 answer/hang up –phone
4 menu forward/backup
5 up/down arrow

- Resetting after service
  - Select "Service scope in XXX" with arrow buttons
  - Press "O" button on IC, menu "To be carried out appears
  - Select "Full service" using + and – buttons
  - Confirm with upward arrow (used as enter button)
  - "Oil Type" menu appears
    - Select 229.51
    - Confirm with upward arrow button
  - Press "O" button on IC for 3 seconds

Resetting of Maintenance Interval

- Low line cluster
  - Ignition on
  - Depress “O” button until beep sound
  - Release after beep
  - Press “M” button
  - Scroll thru workshop menu items using the “M” button
  - Following display information appears

Display (diesel)	Meaning	Info
Reset Std	Reset following oil change with standard oil	Not used in MB workshops
Reset .31	Reset with oil quality according to sheet 229.31	Press O button for approx. 5 s -Display: “0” Briefly press O button again -Display: “done”
Reset .51	Reset with oil quality as per sheet 228.51/229.51	
Reset wrench	Reset for new vehicles with longer service life	
Reset stop	Undo an inadvertent reset	

  - Reset for .51 only (only displays last 2 digits)

Tire Pressure Monitoring

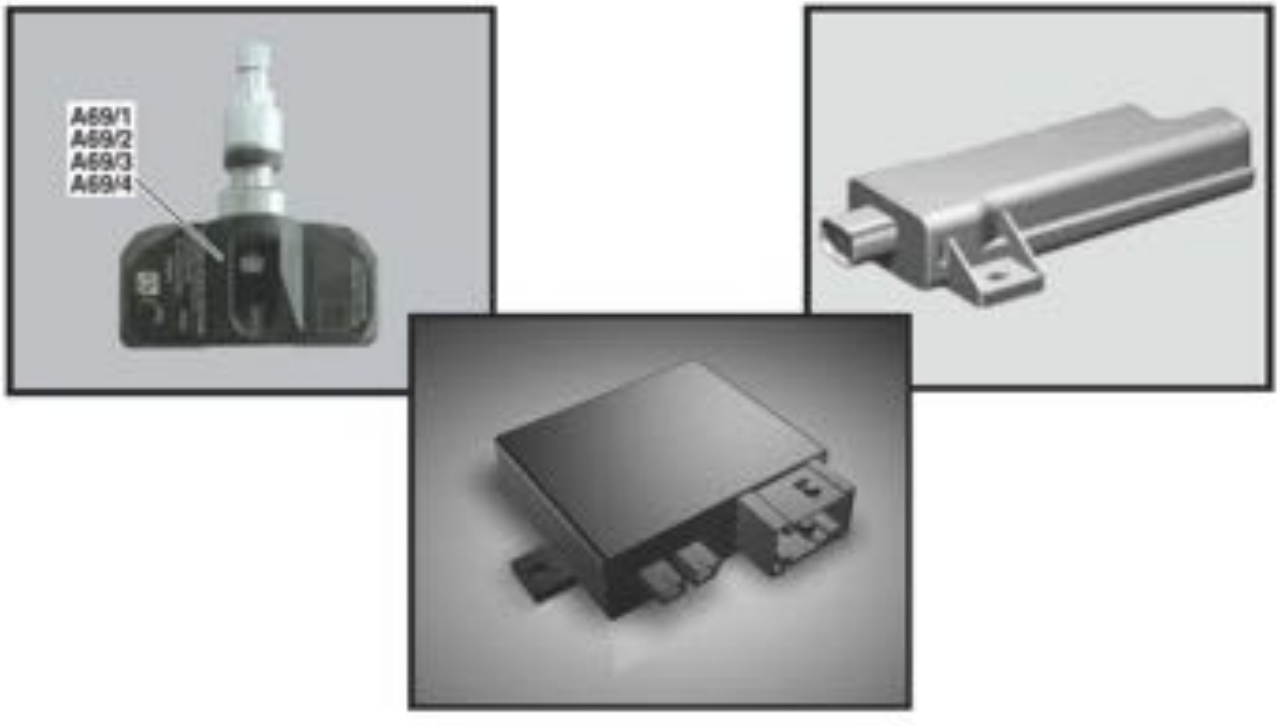

Tire Pressure Monitor (TPM)

- Equipped on 2500 series vehicles
- Siemens system
  - Separate control module, front and rear antenna's
- Tire air pressure and temperature measuring
- Warning at a fixed low pressure threshold (p<1.5/1.7 bar)
- No pressure / location display information in IC
  - Display of "soft warning" at end of trip for minor pressure loss
  - Display of "hard warning" during trip for significant pressure loss according to current NHTSA specification
  - "tire defect" warning if there is a rapid loss of pressure
  - Sudden depressurization can not be detected (i.e. blown tire)

Tire Pressure Monitor (TPM)

- TPMS wheel sensors (A69/1, A69/2, A69/3, A69/4)
- Measures and transmit tire & sensor values
  - Tire pressure
  - Tire air temperature
  - Sensor I.D.
  - Sensor status (i.e. mode, battery condition…)
  - Sensor acceleration

- Front and Rear tire pressure monitor system antennas (A2/110, A2/111)
  - Receive high frequency signals from wheel sensors
- Tire pressure monitor system control unit (N88/1)
  - Located under driver's seat
- Instrument Cluster (A1)
  - Display warning messages and interface to driver

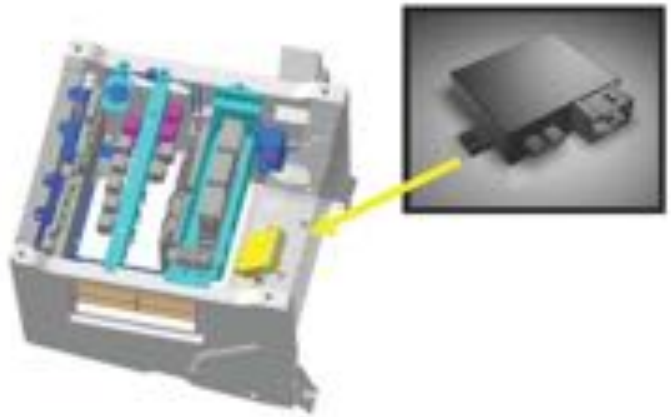

Note: 315 MHz system

Tire Pressure Monitor (TPM)

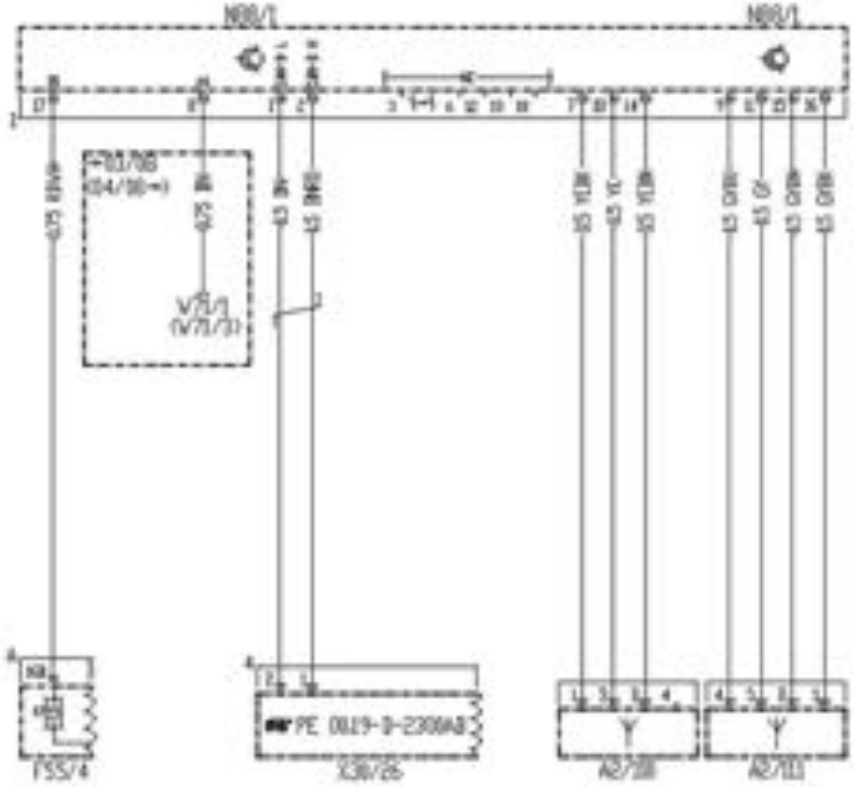

A2/110	Front decoder antenna	W71/1	Driver seat frame ground point 1
A2/111	Rear decoder antenna	W71/3	Driver seat frame ground point 3
F55/4	Fuse block	X30/26	Interior CAN bus connector
N88/1	TPM control module		

Siemens Wheel Sensor

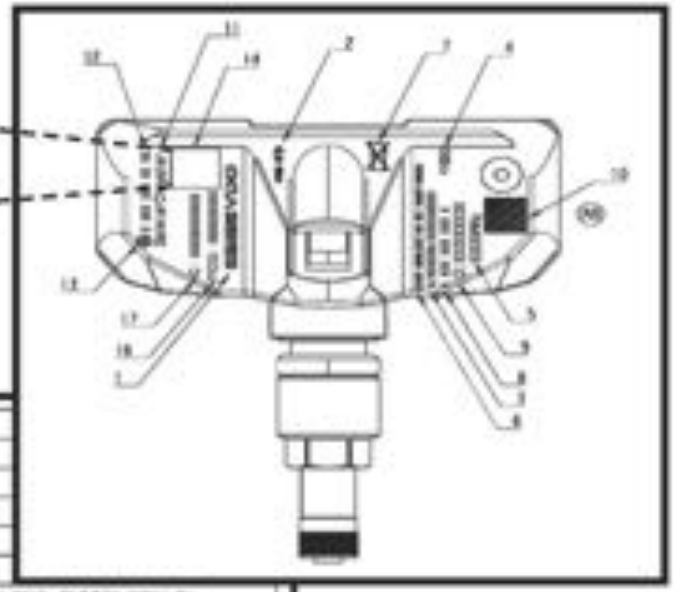

AREA	DESIGNATION	MARKING	
1	MANUFACTURER	SIEMENS VDO	
2	MATERIAL HOUSING	«PA6 G CF30»	
3	VISUAL CODE	X/XXXXX/XXXXXXXXX	
4	DATE CODE	YYDDD	
5	FREQUENCY VALUE	XXX MHZ	
6	OTHER HOMOLOGATION SEE OWNER MANUAL	OTHER HOMOLOGATION SEE OWNER MANUAL	
7	RECYCLING	LOGO "NO TRASH"	
8	9V PRODUCT REFERENCE	5 XXX XXX XXX	
9	MICRO IDENTITY	ID: XXXXXXXX	
10	DATA MATRIX		
11	CUSTOMER	DaimlerChrysler	
12	DAIMLERCHRYSLER REFERENCE	X XXX XXX XX XX	
13	MERCEDES LOGO		
14	FREQUENCY FOOLL-PROOFING	CMPTY = 315MHz	HORIZ.LINES = 433MHz
15	CE LOGO		
16	US HOMOLOGATION LABEL	FFC ID: XXXXXXXXXX	
17	CANADIAN HOMOLOGATION LABEL	IC: XXXXXXXXXXXX	

Labeling Specification

TPM Antenna Strategy

- 2 antenna system utilized
- Antenna locations
  - Front – behind right front head lamp on longitudinal member
  - Rear – left hand longitudinal member near rear axle
- Signal strength limitations due to:
  - Vehicle length
  - Extra steel belting and reinforcement of high load rating tires

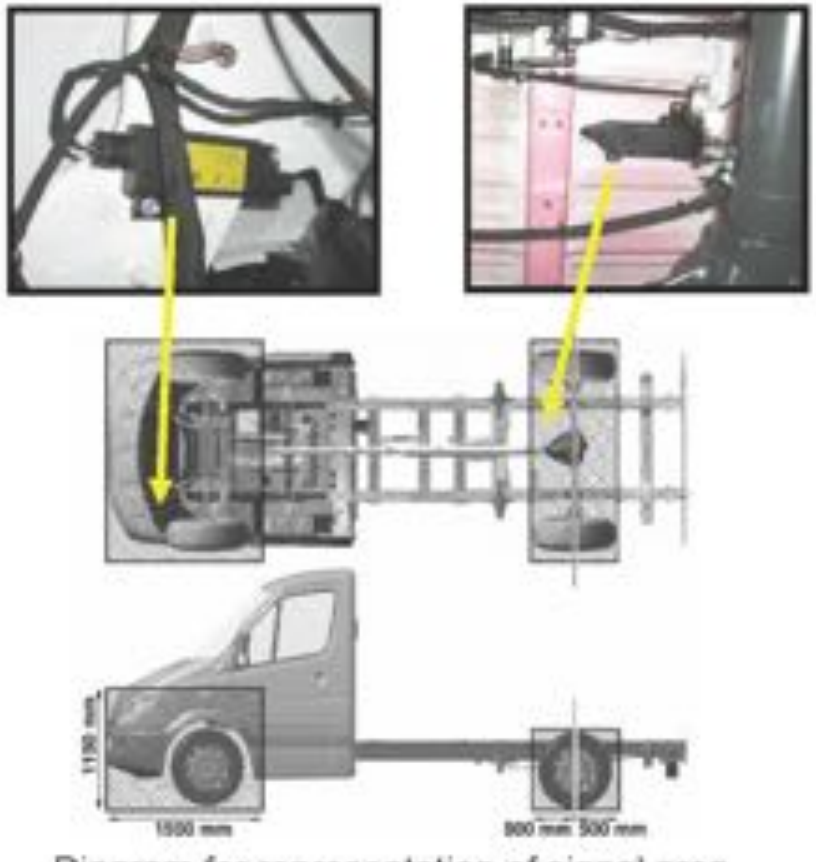

Diagram for representation of signal area of TPM sensor to respective antenna

Sensor Operating Modes

- Park Mode
  - Enters into "park mode" if sensor acceleration <5g for 15 minutes
  - Reduced pressure reading and transmission rates
    - Pressure reading every minute
    - Transmits if pressure lose >threshold
    - Ends all transmissions after 13 hours
- Drive Mode
  - Enters into "drive mode" from "park mode" if sensor acceleration >5g for 20 seconds
  - Initially enters learn-in mode (also known as 30 block mode)
    - Pressure reading every 5 seconds
    - Transmits 1 data block every 15 seconds until 30 blocks of data have been transmitted (approx.7 – 9 minutes)

Sensor Operating Modes

- Drive Mode
  - Enters into "drive mode 1" (normal operation) from "30 block mode" after learn-in is completed if sensor acceleration >5g
    - Transmits once a minute or if pressure loss >threshold
  - Enters into "drive mode 0" (stationary mode) if sensor acceleration <5g regardless if sensor was in "30 block mode" or "drive mode 1"
    - Transmits only if pressure loss >threshold
    - Reenters "park mode" is vehicle <5g (stationary mode) for 15 minutes

TPMS Control Module Modes

- Learn-in (30 block) mode
  - Enters into learn-in mode if the control module is woke up
  - Takes approximately 20 minutes for control module to go to sleep once K15 is off and CAN is asleep
  - If sensor ID's are found to be known, control module will exit out of learn-in mode even though sensors are still transmitting at an increased rate
- Drive Mode
  - Receives and evaluations data from individual sensor transmissions each minute or if pressure decrease > threshold

TPM Operational Diagram

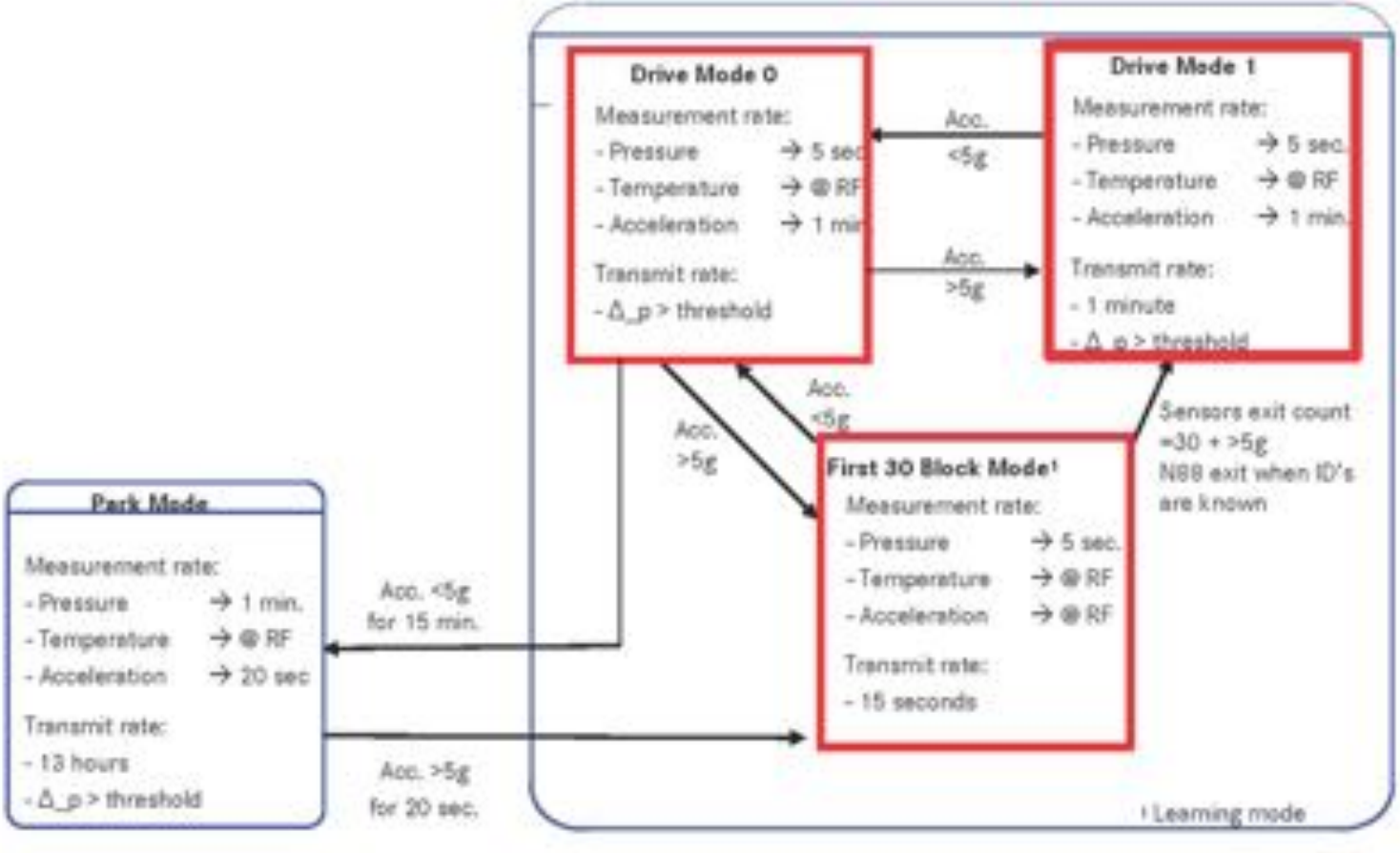

TPM Warning Algorithm

- Basis for warning algorithm are the specified pressure values
  - Isochoric line created based on a calibration point (pressure and temp.)
- Capable of 4 different warning types
  - Value below limit of temperature compensated pressure threshold (soft warning) based on a calibration point
  - Value below limit of additional (lower) temperature compensated pressure threshold (hard warning) based on a calibration point
  - Rapid pressure loss (hard warning)
  - Value below the limit for minimum pressure required by NHTSA

- Warning thresholds *example* at 29 psi set pressure
  - Soft Warning @ 1.75 bar (25.4 psi) – temperature compensated
  - Hard warning 'Check Tires' @ 1.6 bar (23.2 psi) – **not** temperature compensated
  - Hard warning 'Tire Defect' @ Δ pressure > 0.25 bar (3.6 psi) / minute – temp. compensated
  - Hard Warning NHTSA 'Check Tires' @ 1.5/1.7 bar (21.7/24.9 psi) – fixed min. pressure

TPM System Reactivation (Setting New Specified Pressures)

- Initiated by TPMS reactivation request in IC
  - "Tire Pressure Monitoring System reactivated" displayed in IC
  - Current SW level remembers request for 20 minutes only
  - Sensor ID's are not erased or relearned during this process
- Current pressure values are adopted as new specified values if:
  - Pressures are above the "minimum set value" set in TPMS control module
  - Vehicle must be driven >16mph within 20 minutes or system reactivation
  - Monitors pressure for 3 minutes, pressure must not vary by >0.1bar (1.5psi)
  - Plausibility check of pressures
    - Above minimum "set value" and NHTSA minimum pressure
    - Pressure difference between 4 tires <1.5bar (22psi)
  - Log created in "Activation Memory"

TPM SDS Diagnosis

- Improved Repair Verification (VRV) compliant ECU
  - Fault memory split into Fault and Event memory
    - Event memory may not be a problem (i.e. over temperature) or may be a problem associated with another system or (i.e. CAN fault)
  - Limited freeze frame data associated with fault code
- Actual Values (sensor transmission ends >15minutes)
  - "System Status" identifies antenna frequency, control module recognized voltage and if system is in "Park Mode"

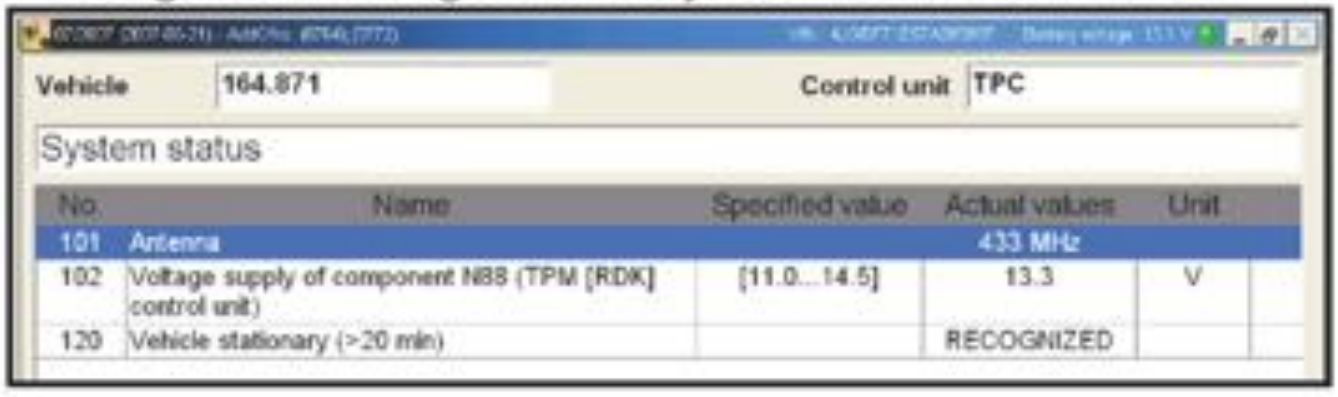

164 shown

TPM SDS Diagnosis

- Actual Values cont.
  - Identification numbers DO NOT correlate to positions
  - Use MB 2000E if needed to identify sensor positions

  - Tire pressure set values can not be changed in Actual value screen

"Specified Pressures" – set during system reactivation

"Set pressure" – system can NOT be reactivated below this pressure (can be changed via Initial start-up)

TPM SDS Diagnosis

- Actuations Menu
  - Allows for testing of signals between individual sensors and N88

  - Transmission can be initiated by either rapid pressure drop or using the MB 2000E (125kHz signal used to initiate sensor transmission)

  - Recommend using MB 2000E tool, always compare sensor ID numbers

Note: It will take a moment for the Siemens wheel sensors to transmit when using MB 2000E.

TPM Control Module Replacement

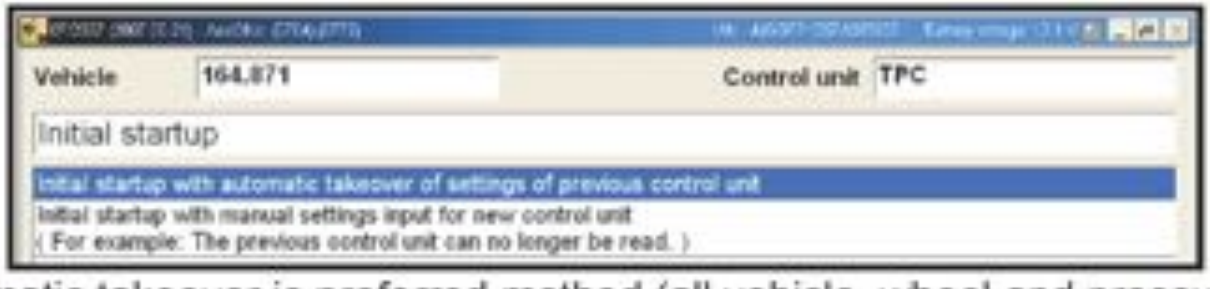

- Automatic takeover is preferred method (all vehicle, wheel and pressure values are transferred)

- Manual input will require you to input selected values
- This is also used to correct inaccurate values (i.e. set value, tire type)

TPM Control Module Replacement

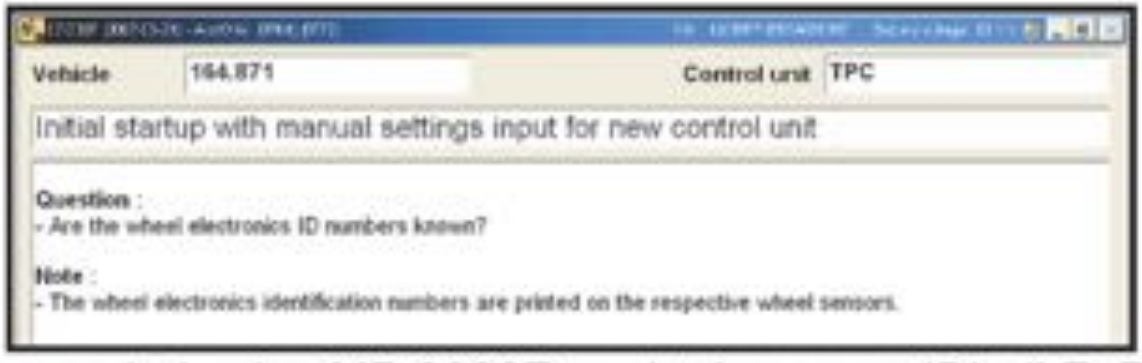

- Recommended using MB 2000E to obtain sensor ID's (LF, RF, LR, RR) and select "yes"

- Manually input ID's
- This screen can also be used if a sensor has been replaced

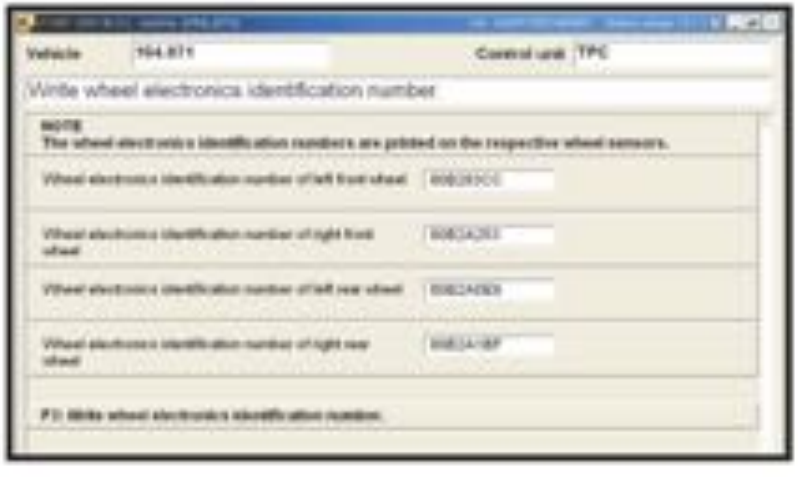

TPM Control Module Replacement

- Select tire type from drop down menu
- Even though this screen says "tire pressure specified value" this is the 'set value" which is the minimum specified value
- Reactivation is not possible below this value
- This value should be set to the lowest value given on the placard driver's door A pillar

Note: 164 shown
906 would show high load tires

Wheel Sensor Replacement Procedure

- Install sensor in tire, fill to specified pressure and balance wheel/tire
- During wheel balancing sensor electronics is activated by acceleration value >5g
- Install tire on vehicle and **wait** for sensor to transition into Park mode
  - **20 minutes** from removing the tire/wheel from balancer
  - Control module will also need to transition into 30 Block mode (20 minutes after K15 removed and no CAN communication)
- Verify sensor operation / frequency using MB 2000E
- Drive vehicle for >10 minutes @ speed >16 mph
  - Required for verification purposes
- System Reactivation is not necessary
  - Unless specified pressures and warning threshold are to be reset

Operational and Diagnostic Notes

- System inoperative or unavailable
  - MIL will flash for 60 seconds following ignition cycle, then stays "on"
  - Function message in TPMS menu according to fault/event
  - No log in Malfunction menu of Instrument Cluster
  - System self resets as soon as conditions permit
- Wheel sensors
  - If a fault code is received for low battery voltage on a sensor use the MB 2000E to confirm position and condition
  - Missing sensor (or wrong ID) detected in about 10 minutes (v>16mph)
  - Sensor learn in will not take place until sensors in Park Mode and ECU has been asleep
  - Sensor learn in after Park Mode took just over 3 minutes (v>16mph)
  - If a new sensor is not recognized, use the MB 2000E to check if correct frequency sensor is installed

Parktronic

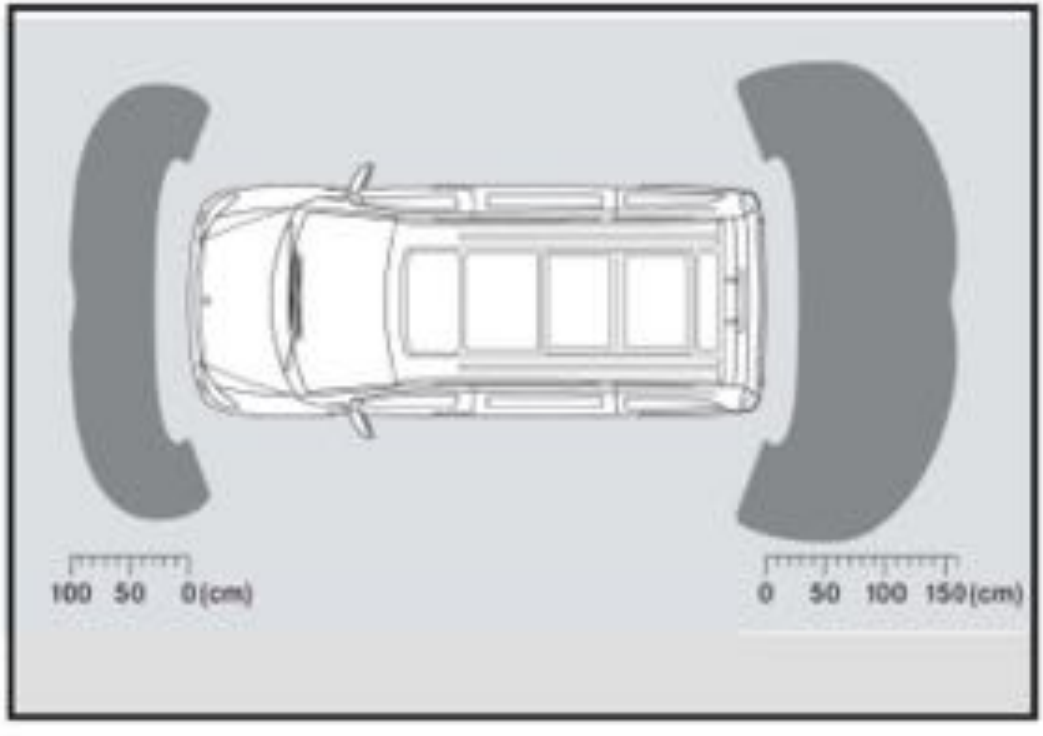

Parktronic (PTS)

- Monitors front and rear areas at maneuvering and parking speeds up to 11 mph (18km/h)
- Provides optical and/or acoustical warnings of obstruction along with relative distance to obstruction
- Uses a total of 10 ultrasonic sensors
  - 6 front
  - 4 rear

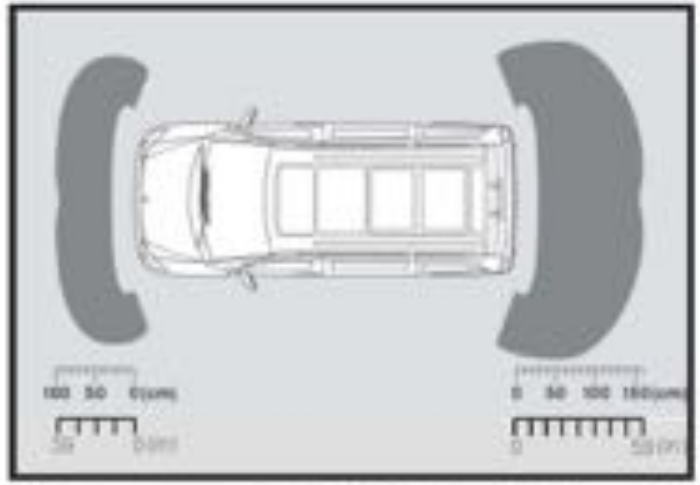

Parktronic (PTS)

- Warning Elements
  - Outside rear view mirrors
    - Rear area
    - Acoustical buzzer in driver seat box
  - Center of cockpit
    - Front area
    - Acoustical buzzer center dash area

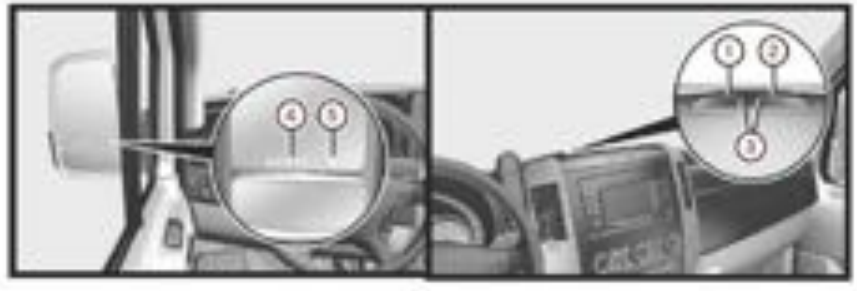

- On/off switch located on Upper Control Panel (UCP)
- Relevant CAN messages
  - Bumper coding / step,
  - Trailer hitch
  - Steering angle (affects sensitivity)
  - Gear
  - Wheel speed sensor pulse count / direction
  - PTS on/off
  - Vehicle speed

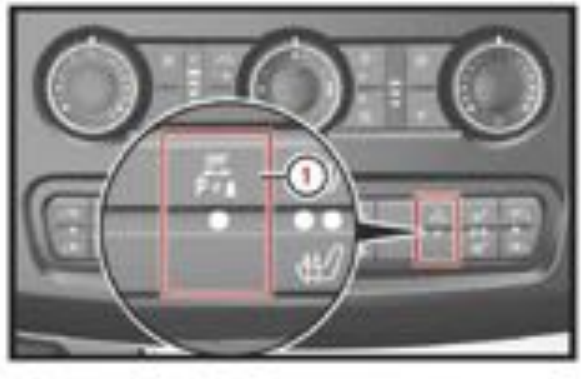

Exterior Lighting

Exterior Lighting

- Halogen headlamp (standard)
  - 55W H7 bulb
- Bi-xenon headlamps (option)
  - Larger illumination range
  - Greater visibility
- Optional fog lamps (option)
  - 55W H7
  - Installed in low beam reflector (halogen)

Halogen headlamp

Bi-xenon headlamp

Exterior Lighting

- When the low beam is switched on, the control unit activates the ignition module within a few milliseconds with the control voltage. A high voltage surge of approx. 20 kV from the ignition system of the control module creates an arc of light between the electrodes and the xenon lamps are ignited.

- If an arc of light with sufficient stability is recognized the control electronics switches to limited power mode. The electrical power is stabilized at 35 W. A voltage converter generates the voltage of approx. 85 W required for the xenon bulb to function safely.

- The bi-xenon headlamp generates low and high beam with one xenon bulb. This is possible with a movable screen. It ensures the corresponding light distribution as required.

Head Lamp Range Adjustment (HRA)

- Legally required for xenon lamps
- HRA control module located front passenger footwell
- HRA level sensors on left side
  - Rear axle
  - Front lower control arm

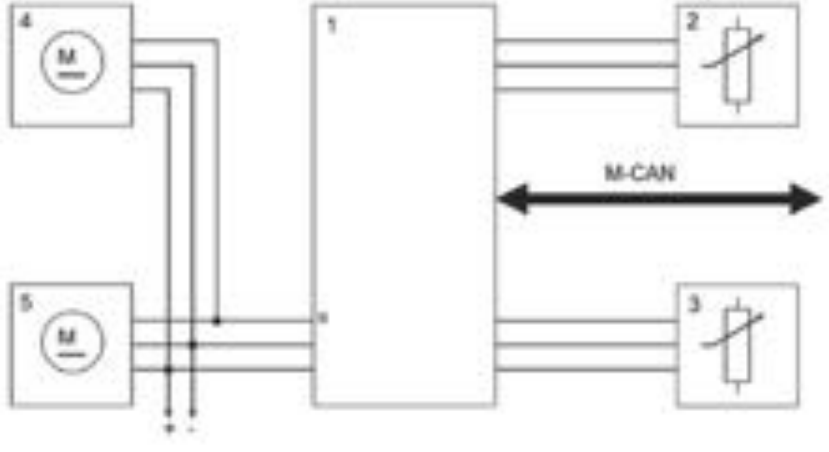

1 HRA control module
2 Front left sensor
3 Rear left sensor
4 Right actuator motor in head lamp
5 Left actuation motor in head lamp
S Signal
+ Circuit 15
- Ground
M-CAN = CAN C

Turn Signals (outside mirror)

- HPS lamp
  - High Pressure Sodium lamp aka sodium vapor high pressure lamp
- Designed to last lifetime of vehicle
- In case of replacement:
  - Remove upper mirror glass
  - Remove turn signal glass
  - Replace bulb assembly

Signal transmission in the networked vehicle

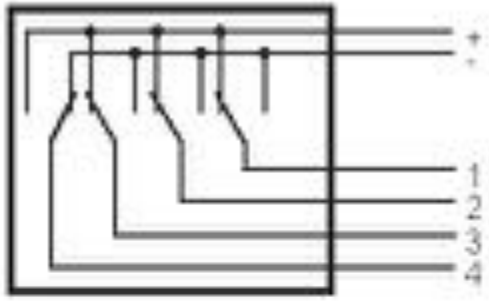

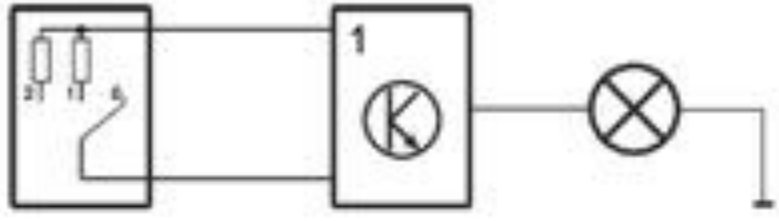

Signal Transmission

The signal therefore travels from a switch (A) to a control unit (B), from there via a data bus (C) to another control unit (D); this switches on the actuator (E), which is a lamp in this case.

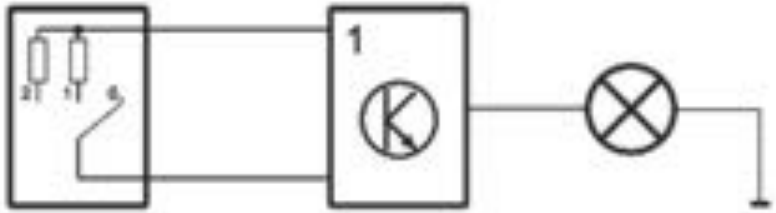

Of course, it is also possible for the switch to lie at a control unit input and for an output to switch the actuator directly.

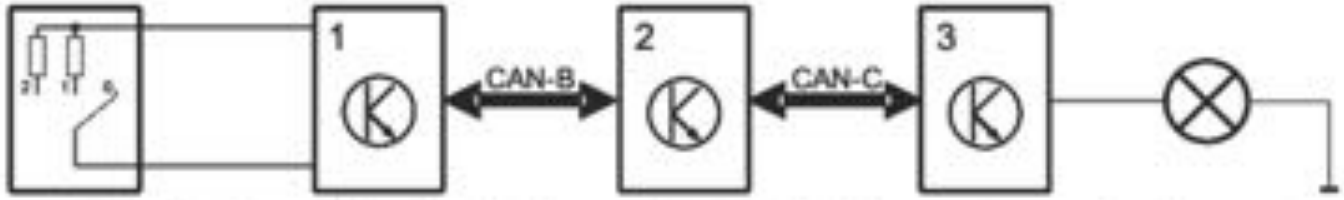

It is also possible for the switch signal to be conducted via 2 bus systems, i.e. via a gateway.

Voltage Coded Switches

In the ***Sprinter*** model designation 906, there are hardly any load switches, which switch the current directly to a consumer.
Wherever multistage switches are required, **voltage-coded switches** are used.
These are supplied with voltage via a line, and conduct several different voltage signals to the control unit via a second line.
This detects the voltage-coded signals and switches the corresponding actuator.

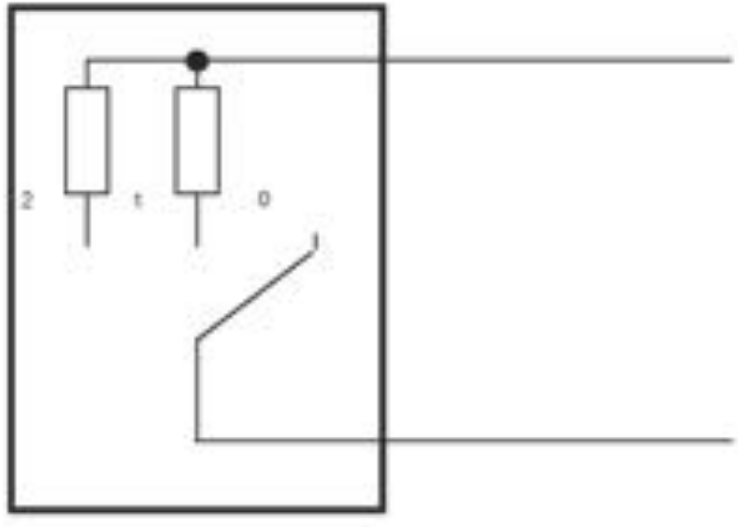

Bit-Coded Switches

A second variant which is used are **bit-coded switches**.

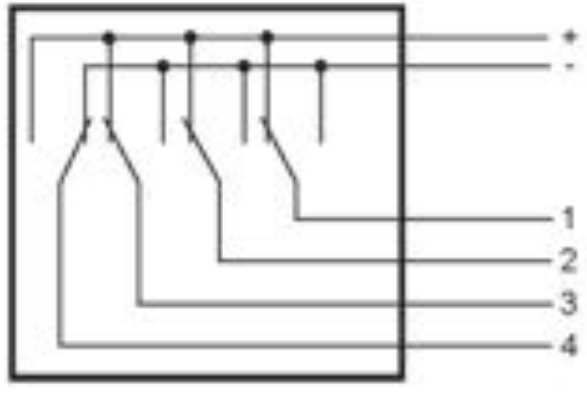

The example of the light switch is shown here.

Here, several separately working switches are switched either to positive or to negative.
In digital technology, this is called "1" or "0".
As the outputs, this leads to a combination of 1 and 0 (in the example of the light switch,
there are 4 switches or outputs). This combination of "ones" and "zeros" tells the control unit which lamp has to be switched on. Bit-coded switches are a little more complex, but very reliable.

In the example, the bit coding is 1 - 1 _ 1 _ 0

Networking

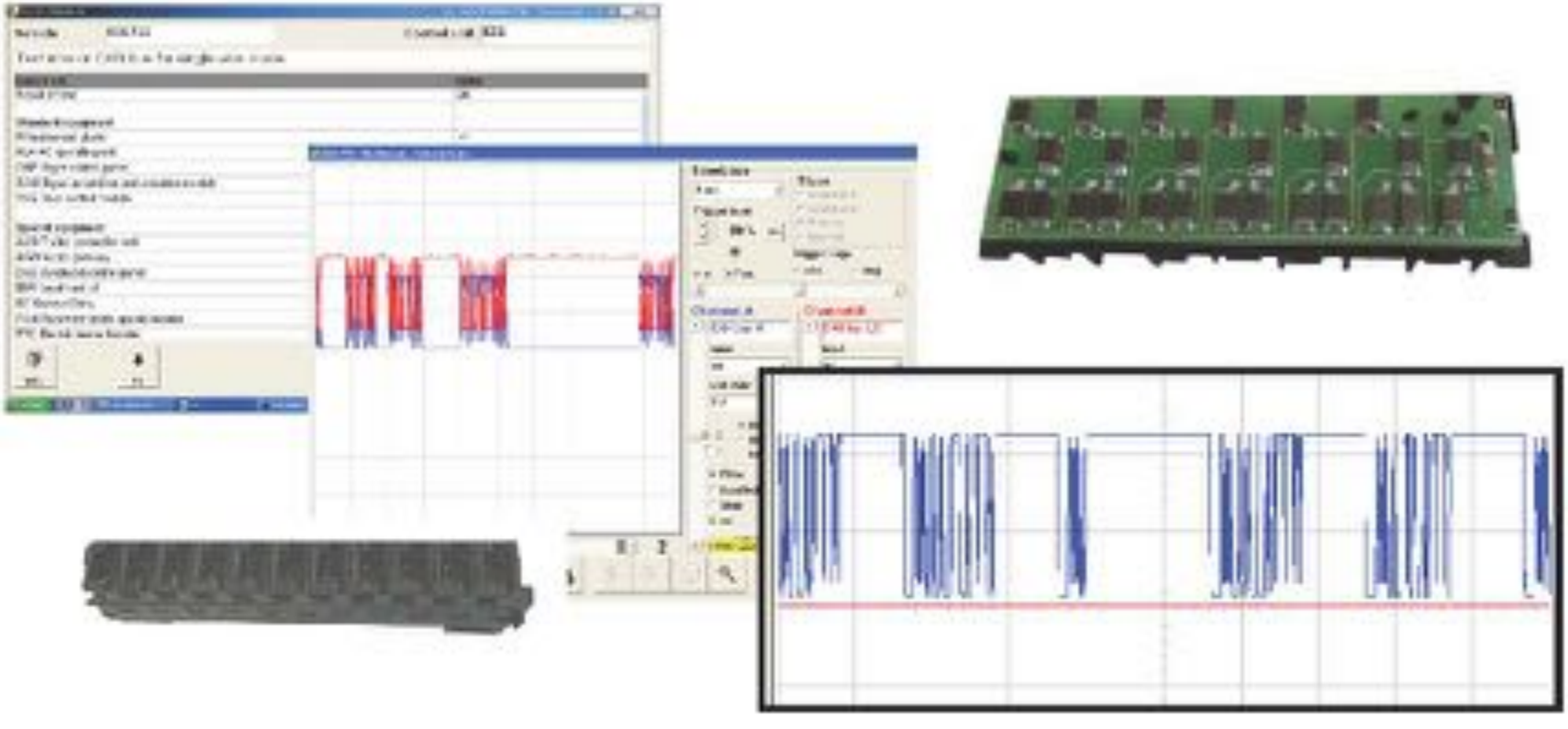

Controller Area Network (CAN)

- A digital communication link between multiple control modules
- A 2 wire, bi-directional communication link with data transmitted according to priority
- Message specific addressing
- **Divided up into 4 networks**
  - Interior CAN (CAN B)
    - 83.3 kBits/s
  - Motor (Engine) CAN (CAN C)
    - 500 kBits/s
  - SCR CAN
    - 500 kBits/s
  - Diagnostic CAN
    - 500 kBits/s

CAN Basics

- CAN wiring is designed with 2 wires:
  - One is referred to as the CAN High (CAN H) wire
  - One is referred to as the CAN Low (CAN L) wire
- CAN wires connected to control modules using voltage distributors (Bm906) or Z splices (Bm901.6 - 905.6, T1N)

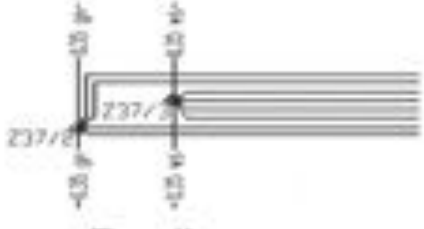

Z-splices

83.3 kBit/s distributor

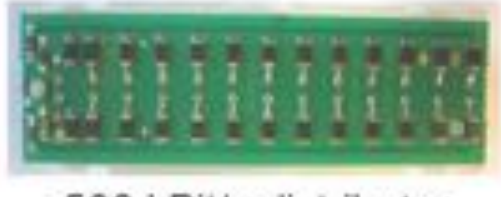

500 kBit/s distributor

MY10 →

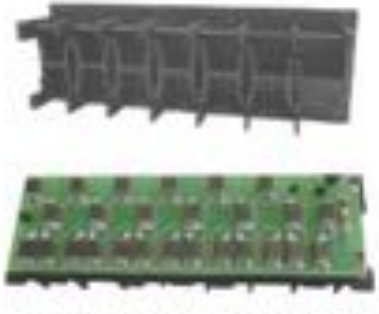

500 kBit/s distributor

MY09 and previous

Network Overview

Bus system	Wiring	Speed	Special features
Interior CAN BUS I CAN CAN class B	2 lines twisted CAN high brown/red CAN low brown	83,3 kbit/s Low speed CAN Bus	The bus subscribers are connected to a total of 3 potential distributors. The I CAN is a class B CAN bus. This is why it is also designated with CAN-B. The I CAN is single-wire capable.
Engine CAN BUS M CAN CAN class C	2 lines twisted CAN high green/white CAN low green	500 kbit/s High speed CAN bus	Terminating resistors in the voltage distributor (120 ohm) and in the engine control unit (120 ohm). The M CAN is a class C CAN bus. This is why it is also designated with CAN-C. The M-CAN is not one wire-capable.
Diagnostic CAN bus D-CAN CAN class C	2 lines twisted SPRINTER (VITO/VIANO): CAN high violet/white (sw/ws) CAN low violet (sw)	500 kbit/s High speed CAN bus	Supersedes the K-line, which is too slow for the large amounts of data. Terminating resistor in the EZS (EIS) or CGW (60 ohm). The D-CAN is a class C CAN bus. It is also designated with CAN-D. The D-CAN is not one wire-capable
MOST Media Oriented Systems Transport	Optical fiber bus, ring shaped	22 Mbit/s	For communications systems. The bus subscribers (HU, AGW, TEL, CDC) must be fitted in the correct sequence and parameterized.
LIN bus Local Interconnect Network	1 line	Approx. 10 kBit/s	Simple serial bus for data exchange between control units.
Body manufacturer CAN bus ABH bus CAN class C	2 lines twisted	250 kbit/s	Terminating resistors 2-times 120 ohm. Refer to body/equipment mounting directives for a precise description.

Data on CAN C (M CAN) can be sent to control modules on the CAN B (I CAN) or vice versa through the Electronic Ignition Switch (EIS). EIS is then referred to as a gateway.

906 Network MAP (MY10)

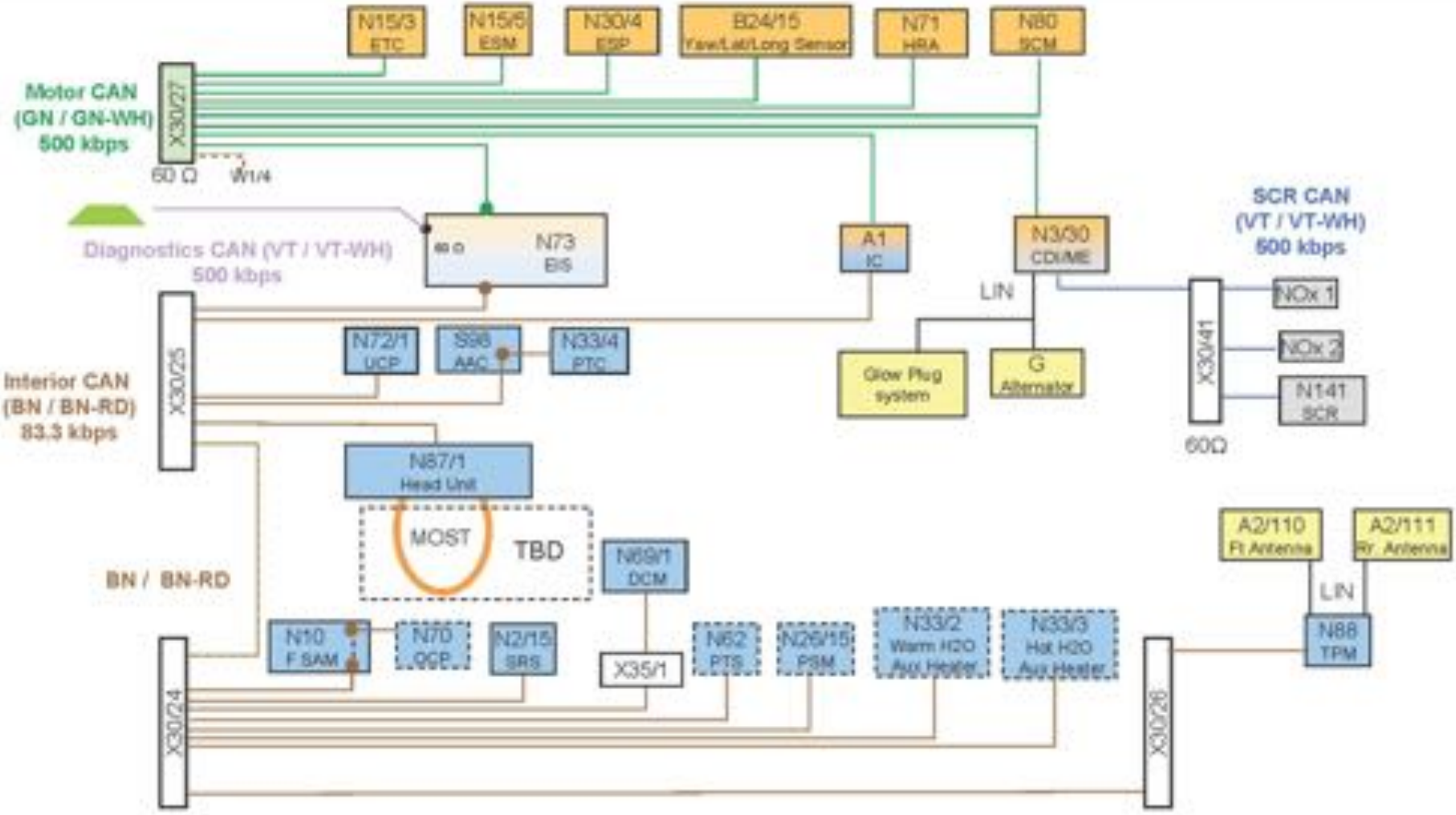

906 Network MAP (MY09)

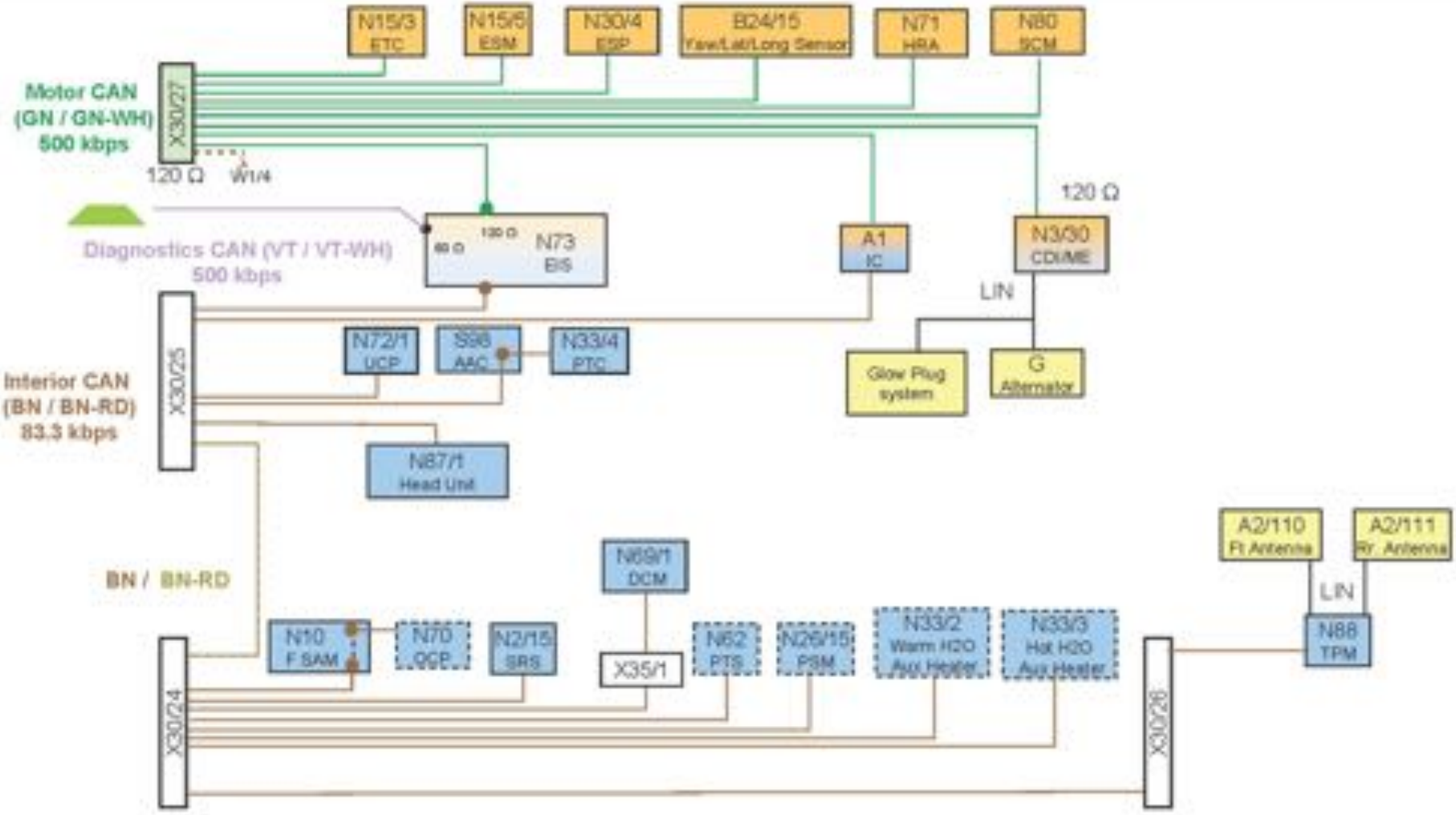

906 Network Legend

A1	- Instrument cluster (IC)
B24/15	- Sensor Cluster (yaw, lateral, longitudinal)
N2/15	- Airbag control module (SRS)
N3/30	- Common Rail Diesel Injection (CDI)
N10	- Front Signal Acquisition Module (SAM)
N15/3	- Electronic transmission control module (ETC)
N15/5	- Electronic Shifter Module (ESM)
N26/15	- Parametrizable Special Module (PSM)
N33/2	- Hot water auxiliary heater control unit 2
N33/3	- Hot water auxiliary heater control unit
N30/4	- Electronic stability program (ESP)
N62	- Parktronic (PTS)
N69/1	- LF door control module (DCM)
N70	- Overhead control module (OCP)
N71	- Headlamp Range Adjustment (HRA)
N72/1	- Upper control panel (UCP)
N73	- Electronic ignition switch (EIS)
N80	- Steering column module (SCM)
N88/1	- Tire pressure monitoring control module (TPMS)
S98	- Automatic air conditioning control module (AAC)
X11/4	- Diagnostic connector
X30/24	- Interior CAN network connector
X30/25	- Interior CAN network connector
X30/26	- Interior CAN network connector
X30/27	- Motor CAN network connector

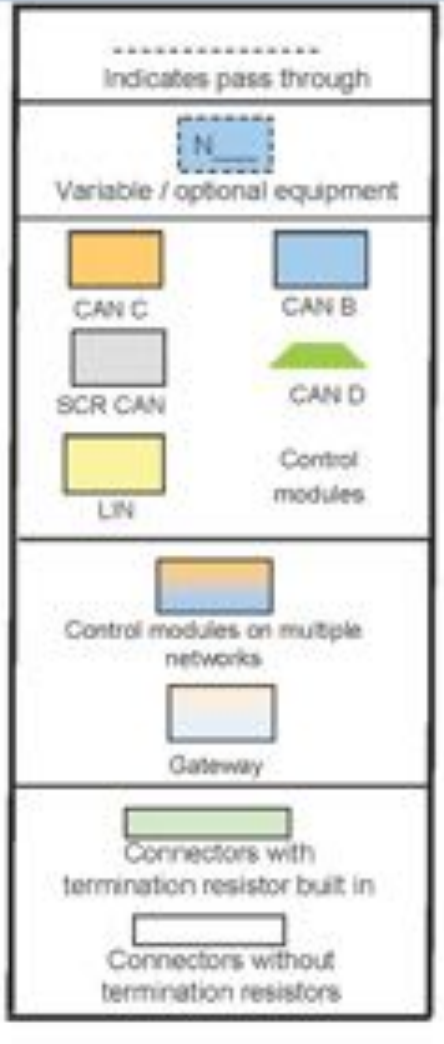

Engine CAN and SCR Voltage Distributor (CAN C or M CAN)

- X30/27 (CAN C)
- Located right side passenger kick panel area
- Termination resistors and condenser incorporated into distributor
- Ferrit beads incorporated into distributor
  - passive electric component used to suppress high frequency noise in electronic circuits
- Ground point connection from 1 connector slot to W1/4
- X34/41(SCR CAN) located by X30/27
  - Similar construction to X30/27 only smaller

1 X30/24 and X30/26
2 X30/27
3 HRA control module
4 X30/41 SCR CAN voltage distributor

MY09 and previous shown

Termination Resistors

- High speed networks require termination resistors (acting like electrical dampers) to prevent erratic operation
- Termination resistors placed in CAN C voltage distributor for Motor CAN (120Ω thru MY09 / 60Ω MY10 →)
- Termination resistors placed in EIS for Diagnostic CAN
- Termination resistor (120Ω) placed in CDI control module in parallel with 120Ω in M CAN voltage distributor (thru MY09)
- Total circuit resistance between CAN H and CAN L should measure:

MY10 → and previous (white cover)

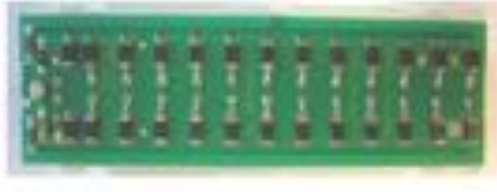

MY09 and previous (black cover)
120Ω at distributor if disconnected from CDI
60 Ω at distributor with CDI connected

Interior CAN Voltage Distributors (CAN B or I CAN)

- No noise suppression material incorporated
- X30/25 located left under dash side below headlight switch
- X30/24 and X30/26 located passenger side kick panel area

X30/25

X30/24 and X30/26

83.3 kBit/s distributor

CAN B & C Voltages

Description	Speed	Voltages
CAN C High CAN C Low	500 kbps	~2.6 volts ~2.4 volts
CAN B High CAN B Low (active)	83 kbps	~0.65 volts ~4.5 volts
CAN B High CAN B Low (sleep)	83 kbps	~0.1 volts ~batt voltage

CAN B will go to sleep within 2 minutes (usually 30-40 seconds) with ignition key removed and no CAN B activity

Note: When testing remember that CAN voltage can be affected slightly by number of control modules on network

CAN B Voltages

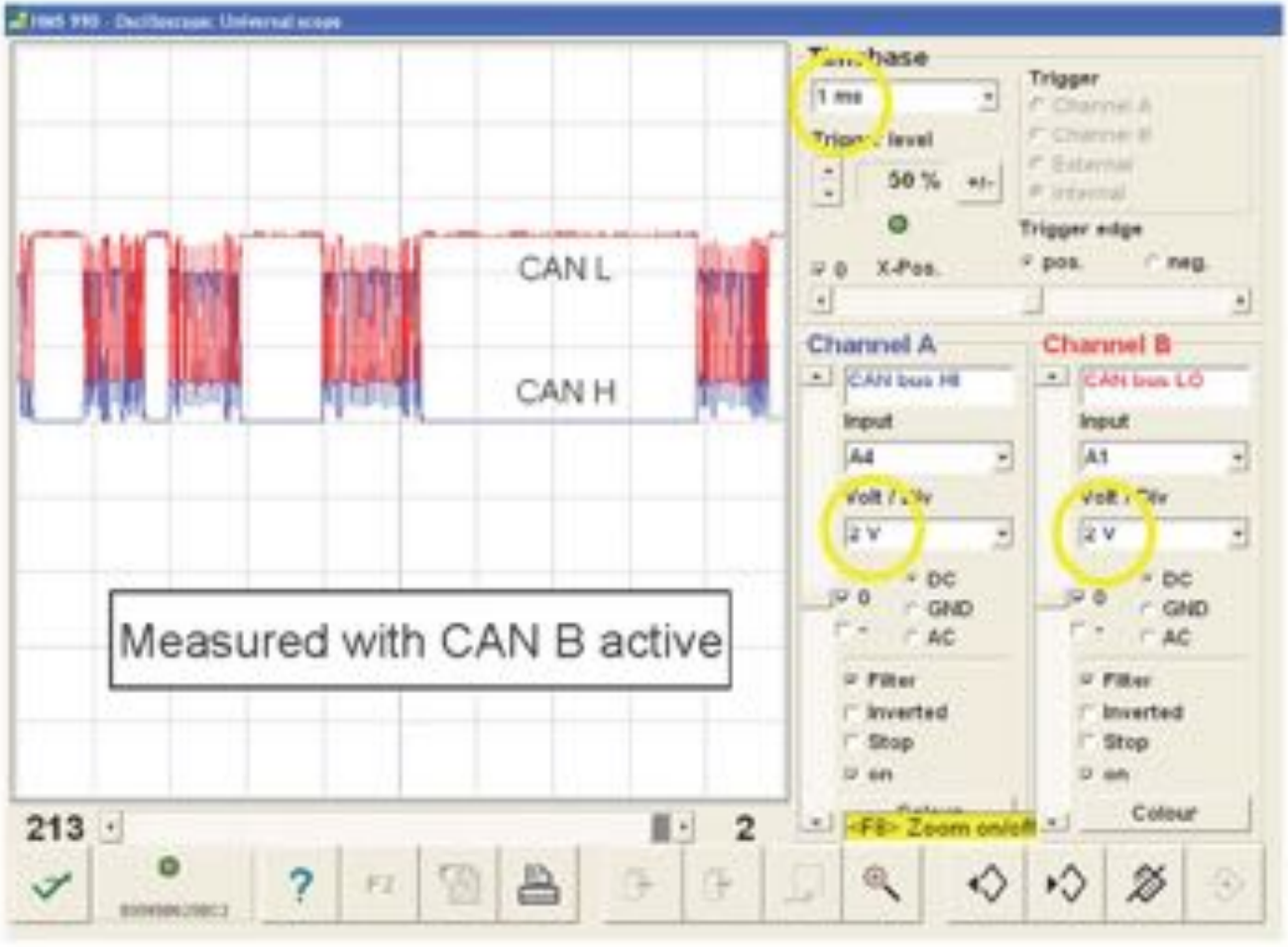

CAN C Voltages

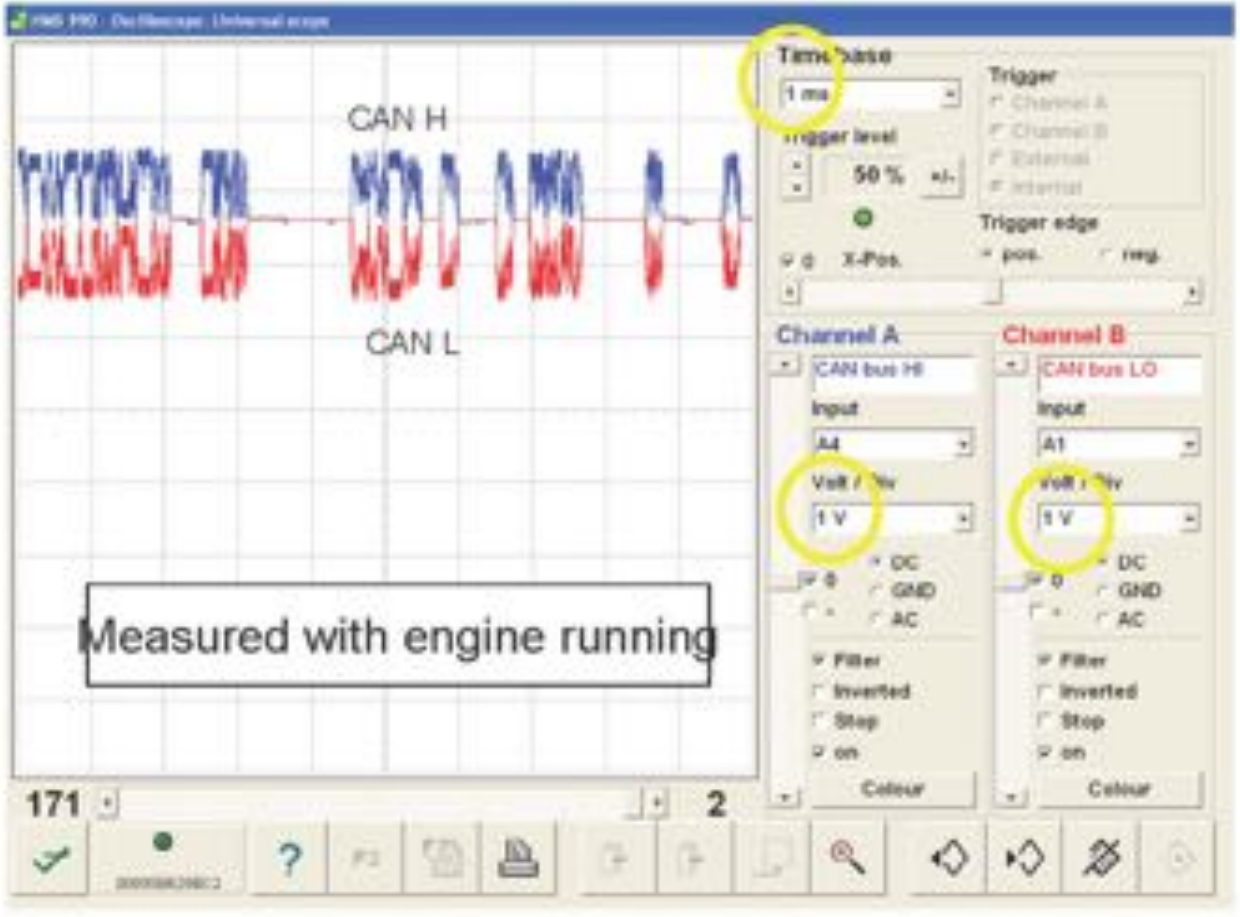

Electronic Ignition Switch (EIS)

- Master of central locking, drive authorization and typically known as the master of the CAN network
- CAN C/ CAN B gateway
- Connection for all control units to diagnostic connector via Can D
- Stores vehicle variant level and sends this data via CAN
  - Storing variant coding data takes place via SCN (software calibration number)

CAN Faults

- If a control unit in the CAN B keeps sending a signal the EIS will not request the CAN B to go into a "sleeping" state
- If CAN H **and** CAN L are shorted to power = no communication
  - Faulty control module
  - Damaged wiring harness
- Can B capable of single line operation
  - Communication occurs on the non-faulty line
  - EIS will open one node if CAN H and CAN L shorted together allowing communication

CAN B Single Line SDS/DAS Test

- Used it identify if a control module is communicating in single line mode

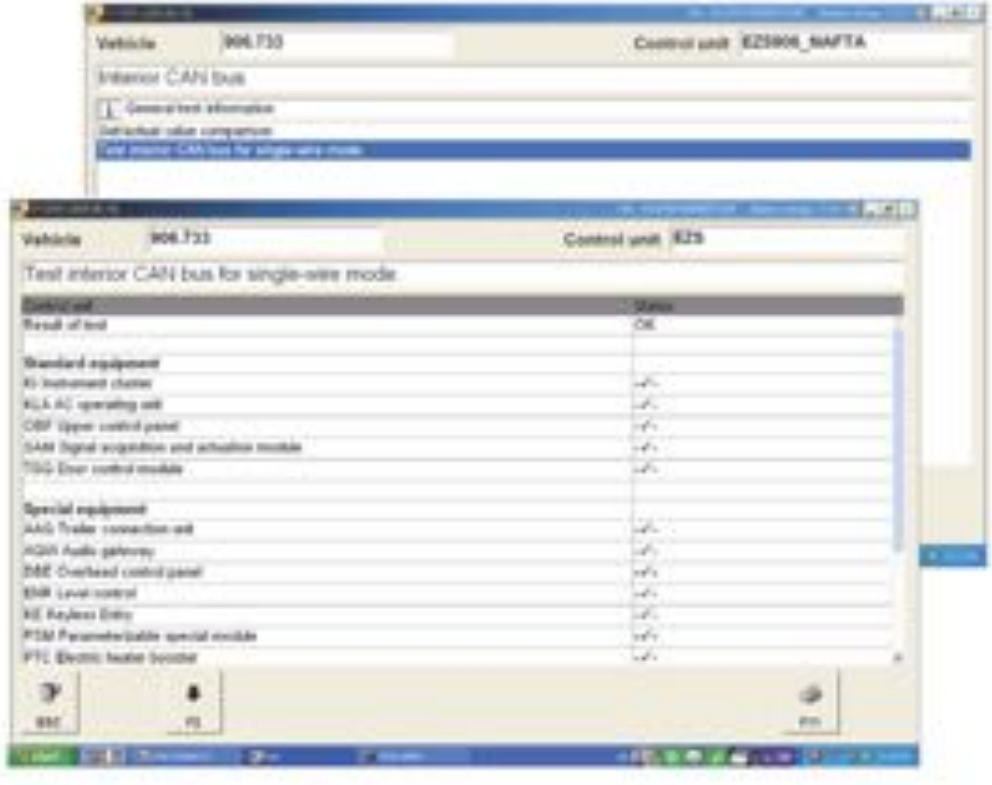

Faulty Module Identification

- If an individual module is causing a fault on the CAN network (i.e. shorted to power/ground or putting corrupt data on network) diagnosis would include either removing CAN connectors from distributors individually until fault goes away or unplug all connectors from distributors and reconnect individually until fault reoccurs (pay attention to jumpers between distributors) Once connection for faulty module is identified, use SDS/DAS to identify module

Local Area Network (LIN)

- 2 LIN buses on 906
  - Alternator LIN
    - CDI control module → alternator and glow time output stage
  - TPM LIN
    - TPM control module → TPM antenna(s)

LIN BUS Overview

- LIN – Local Interconnect Network
  - Low cost network that compliments multiplex CAN networks
  - Single wire bi-directional communication system
  - Connects control units to additional components
- Low speed – data transfer rate between 1kbit/s – 20kbit/s
- Supports sleep and wake-up mode
- Either master or slave may initiate a wake-up
- Single Master (control unit) and multiple slaves (16 max)

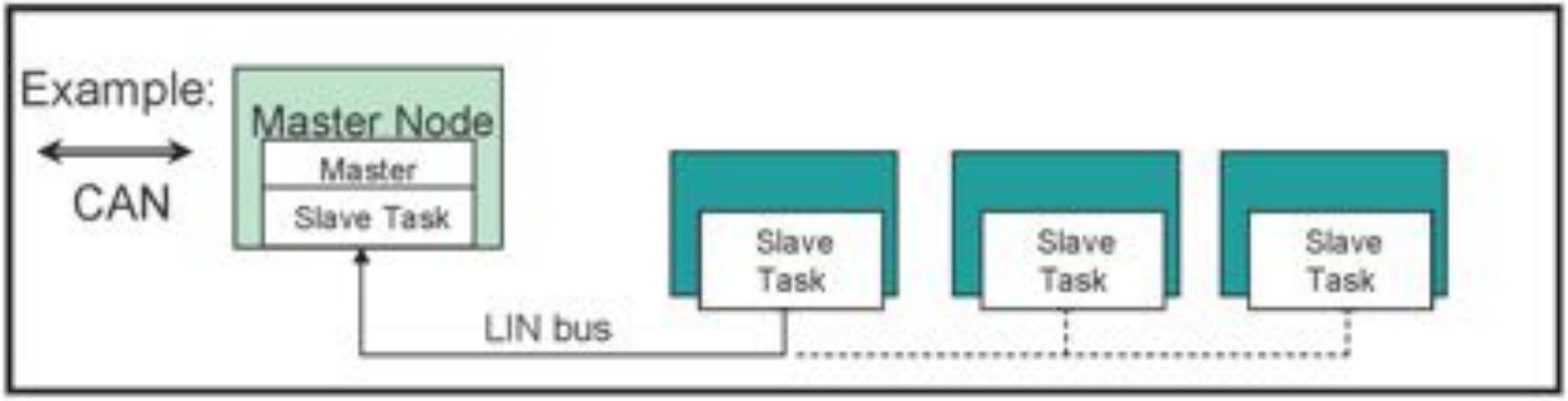

LIN BUS Overview

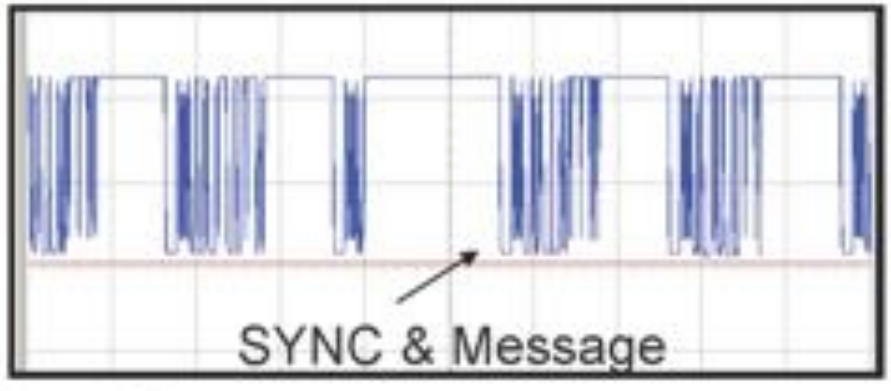

- LIN Timing
  - Master components contain a quartz or ceramic resonator
    - Very fast and accurate timing
  - Slave components contain an internal RC resonator (not Quartz or Ceramic)
- Resonance -
    - Resistor and Capacitor (RC) dissipate electrical resonance
    - Fast startup
    - Low cost
  - A SYNC field within one LIN frame message ensures stability

LIN BUS Overview

- BUS termination resistors contained inside each component for voltage regulation between power and LIN signal line (cannot test)
  - Master – R1 = 30k Ohm & parallel R2 = 1k Ohm
  - Slave – 30k Ohm

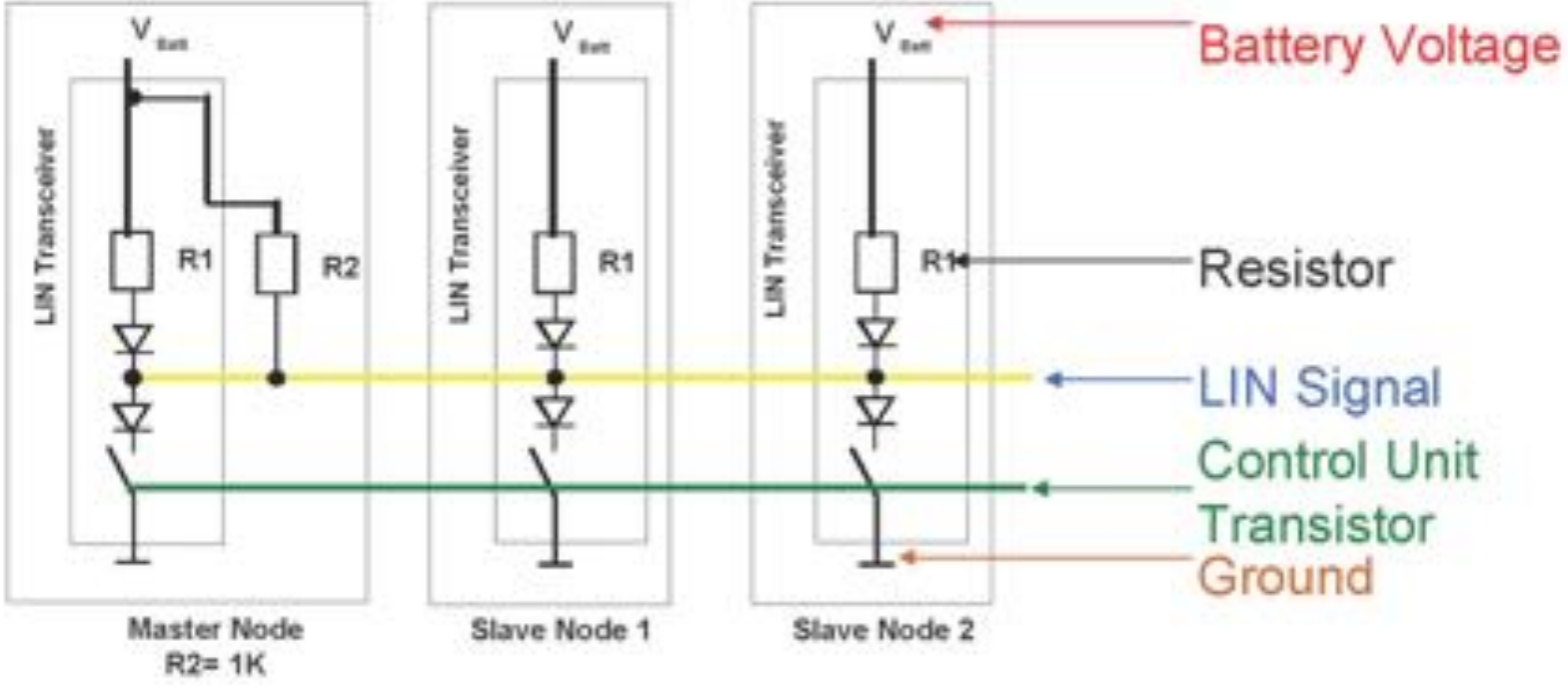

LIN BUS Overview

Logical Value	Bit Value	BUS Voltage
Dominant	0	Ground*
Recessive	1	Battery Voltage**

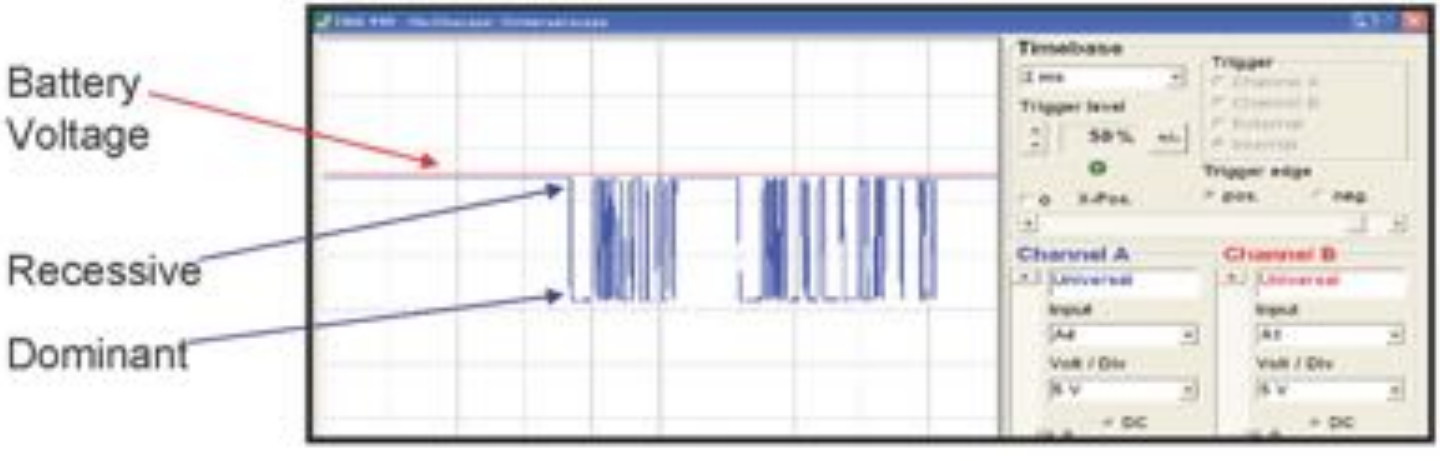

- Dominant Voltage does not drop completely to ground, due to the electrical structure of each component's transceiver
- Recessive Voltage typically between 0.2 – 1.5 Volts below actual battery voltage, due to amperage reduction of the LIN signal achieved in each component's transceiver

Paramiterizable Special Module (PSM)

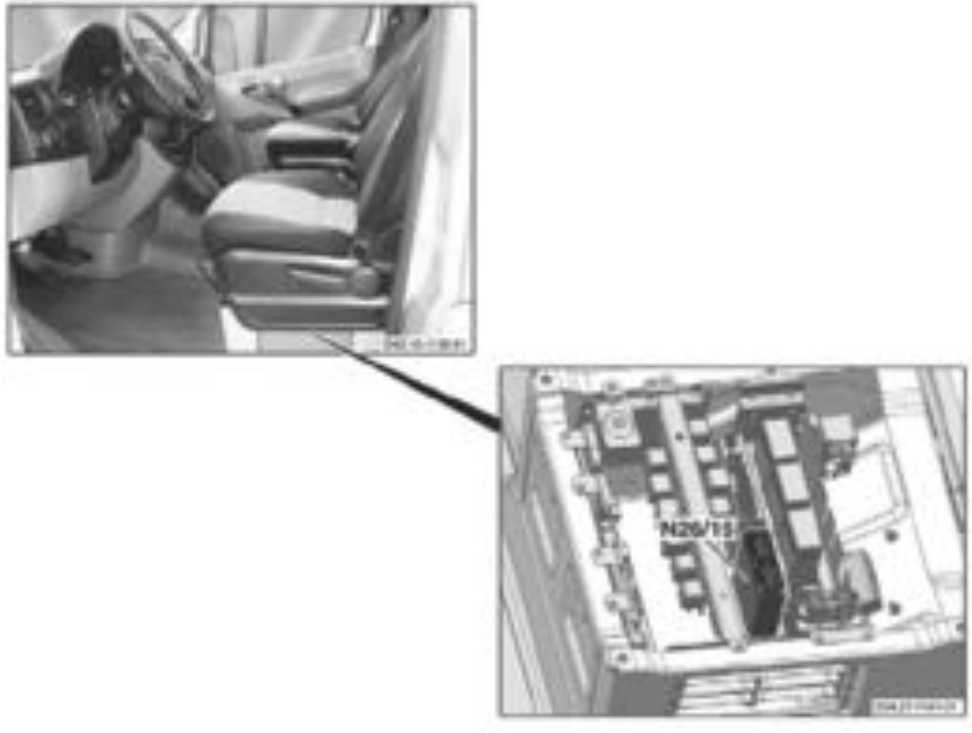

Paramiterizable Special Module (PSM)

Why PSM?

In modern networked vehicles it is increasingly difficult after modifications or retrofitting not planned by the plant to intervene in the on-board electrical system. The classical circuitry, 12V voltage supply → switch → actuator no longer exists in these vehicles.

Today, switches are connected very close to the fitted control unit. They also no longer supply +12V or -12V, instead, they deliver e.g. voltage-coded or bit-coded signals over very thin lines (0.35 – 0.5 mm^2). In the control unit these signals are usually transformed into CAN messages and transmitted to a CAN bus system. A second control unit installed close to the actuator (lamp, motor, valve ...) receives this signal and energizes the actuator with the operating current.

The control units monitor their own inputs and outputs, mostly also for short circuit to positive and minus, interruption and overload (lamp failure checking).

A difficult intervention from outside with a second switch or a second actuator would lead to error messages, limp-home, malfunctions etc.

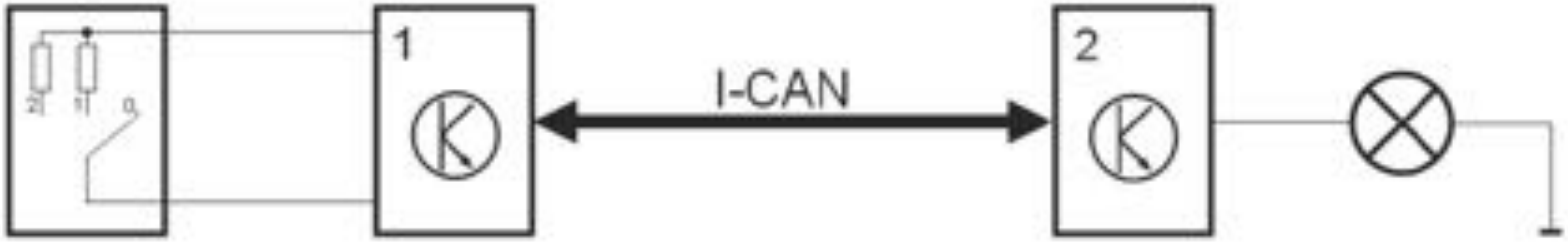

Paramiterizable Special Module (PSM)

- Also known as Programmable special module
- Used to program special vehicle functions for vehicle upfitters
- CAN B component
- Receives and transmits CAN data for input / output control of customer specific functions
- Located under drivers seat

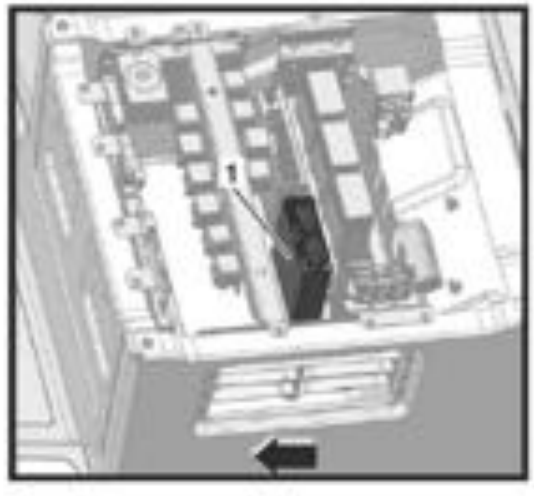

Paramiterizable Special Module (PSM)

- In addition to CAN B a second body builder CAN (CAN ABH) can be added to the PSM
- ABH CAN (Class C)
  - PSM - 120Ω terminating resistor
  - Last control module also has 120Ω terminating resistor
  - Has to be programmed
  - Baud rate selectable
    - 500 kBit/s, 250kBit/s or 125 kBits/s

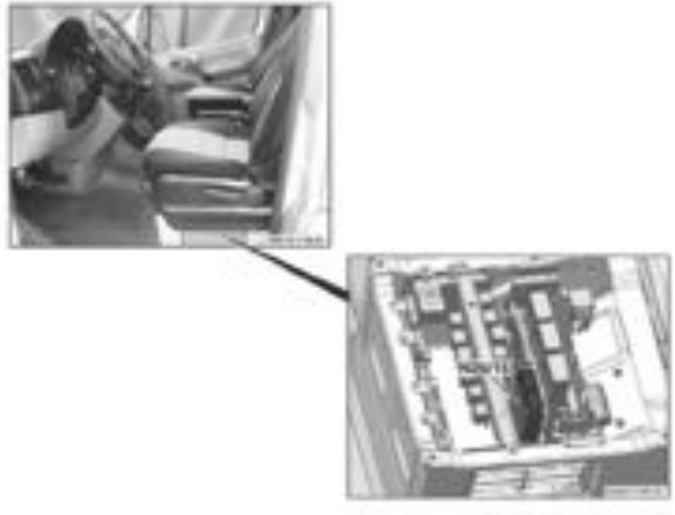

Paramiterizable Special Module (PSM)

An intervention in the on-board electrical system is only possible without problem with the parameterizable special module PSM. This control unit can transmit and receive messages of the on-board CAN bus system.
The PSM is connected to the I CAN (CAN class B). Access to the M CAN (CAN class C) can also take place with the gateway function of the EZS. This means that many messages containing

- Commands (e.g. switch on rear fog lamp)
- Status messages (e.g. right sliding door open)
- Measured values (e.g. outside air temperature is 21°C)

etc., can be received and transmitted by the PSM. All signals available to the PSM, over CAN, over the inputs and outputs and internal signals, are summarized and numbered in a list. This list is also called the "signal pool". On parameterization of the PSM, this signal pool is used to select the correct signals based on the numbers (ID).

Example 1: The lamp installed as standard should be switched via a retrofitted external switch connected to a PSM input. After closing the external switch, the PSM transmits the message "switch on rear fog lamp" on the CAN bus. Control unit 2 switches the lamp and the entire monitoring functions (e.g. lamp check) remain unaffected.

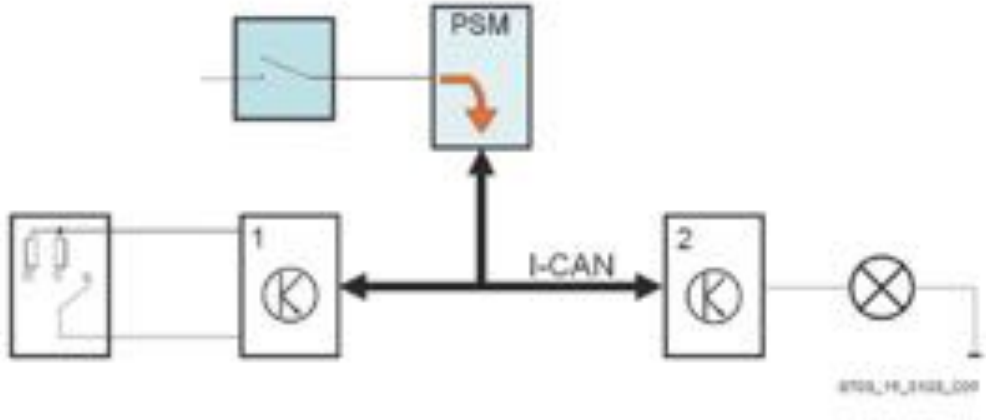

Paramiterizable Special Module (PSM)

Example 2: The standard fitted switch is operated. Control unit 1 transmits the message "switch on lamp". Control unit 2 receives the message and switches the lamp on. The PSM control unit also receives the "switch on lamp" message and can thus simultaneously switch on a second external lamp.

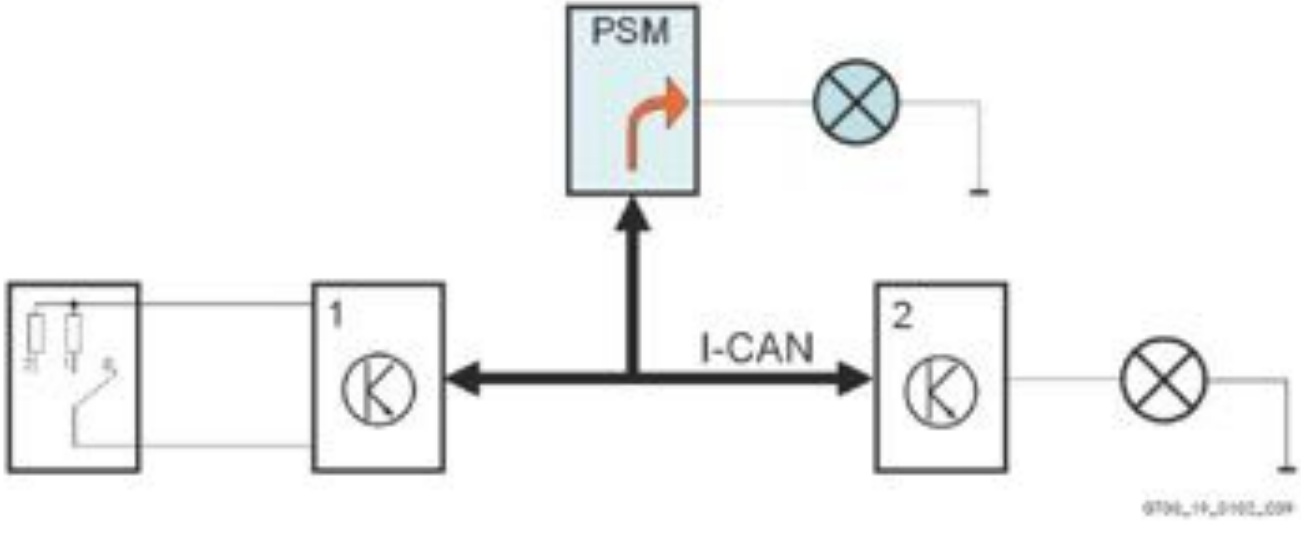

The PSM has 10 switch inputs and 20 switch outputs (which can also be used as input by reparameterization) for this purpose and, as already mentioned, the signal pool. Furthermore, the PSM can receive, evaluate and transmits messages signals from the accessory manufacturer CAN and messages over a further bidirectional interface (RS485/9).

Paramiterizable Special Module (PSM)

- Continuous engine operation feature (MWS)
  - Allows engine to run with ignition key removed and doors locked
  - Designed for rescue vehicles
  - New for MY09 PSM
  - PSM actives circuit 15 and 15R
  - Preconditions
    - Parking brake applied
    - Trans in "P"
    - Vehicle at standstill
    - RPM >500

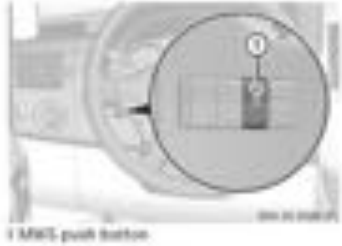

1 MWS push button

MWS symbol

Activate the MWS:

- Engine running
- Set hand brake, shift manual transmission to neutral or automatic to "P"
- Press and hold MWS button (LED on)
- Within 3 s the key must be removed (the button must be held down the entire time while turning back and removing the key).
- The activated status is signaled by the LED in the MWS button.
- The vehicle can now be locked/unlocked.

Deactivate the MWS:

- Insert key in ignition lock and turn to position 2
- Press MWS switch and the LED goes out
- The vehicle is then ready to be driven again.

Paramiterizable Special Module (PSM)

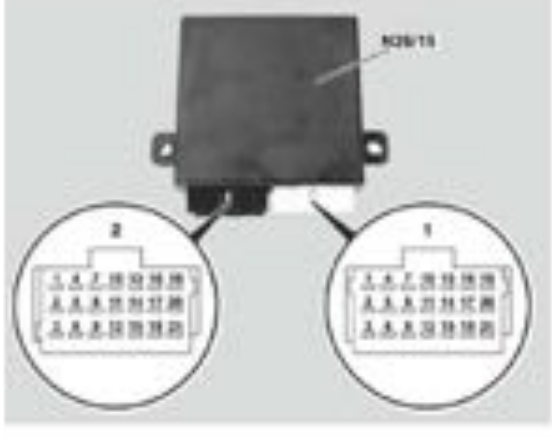

Inputs:

3 Digital inputs, plus active (H)
3 Digital inputs, ground active (L)
4 Analog inputs

Outputs:

2 Half-bridges (HB)
10 Plus outputs (HS)
6 Ground outputs (LS)
2 Plus/PWM outputs

When plug 1 or 2 is disconnected from the PSM control unit, none of the outputs on the PSM control unit must be active. Disconnect plug 1 (plug with terminal 30 supplies) first, and then plug 2.

For reasons of contact reliability, only MCP 2.8 contacts (silver, not sealed) manufactured by Tyco are to be used if required.

All outputs can be used as inputs through parameterization.

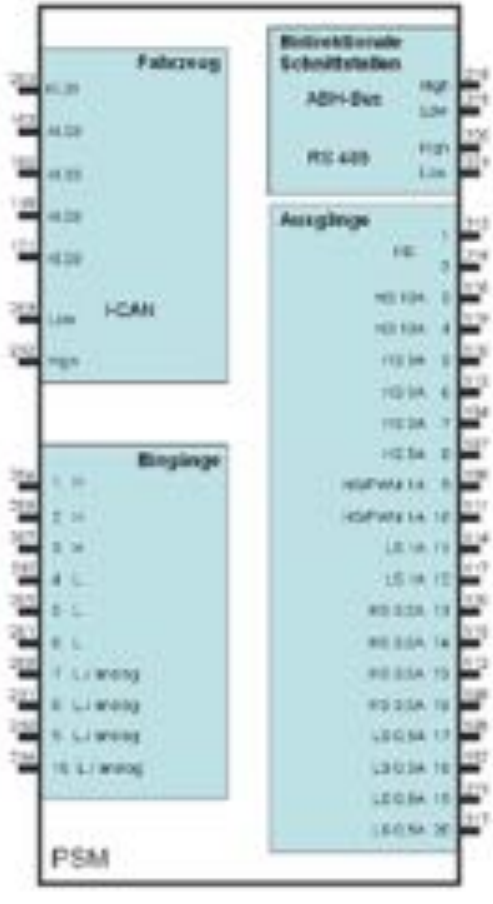

Paramiterizable Special Module (PSM)

- 235 page booklet provided on USB drives for addition reference information regarding PCM. However the option for specific reprogramming of PCM currently not provided via SDS/DAS

Telematics

MY10 Telematics

1 Multifunction steering wheel
2 Steering column module
3 EIS
4 ESP
5 Wheel speed sensors
6 Instrument cluster
7 Antenna
8 AM/FM antenna leads
9 Head unit
10 Universal consumer interface (UCI)
12 Speakers
13 Bluetooth antenna (phone)
13 UCI connector
14a UCI terminal (iPod)
14b UCI terminal (USB)
14c UCI terminal (AUX jack)
15 Microphone

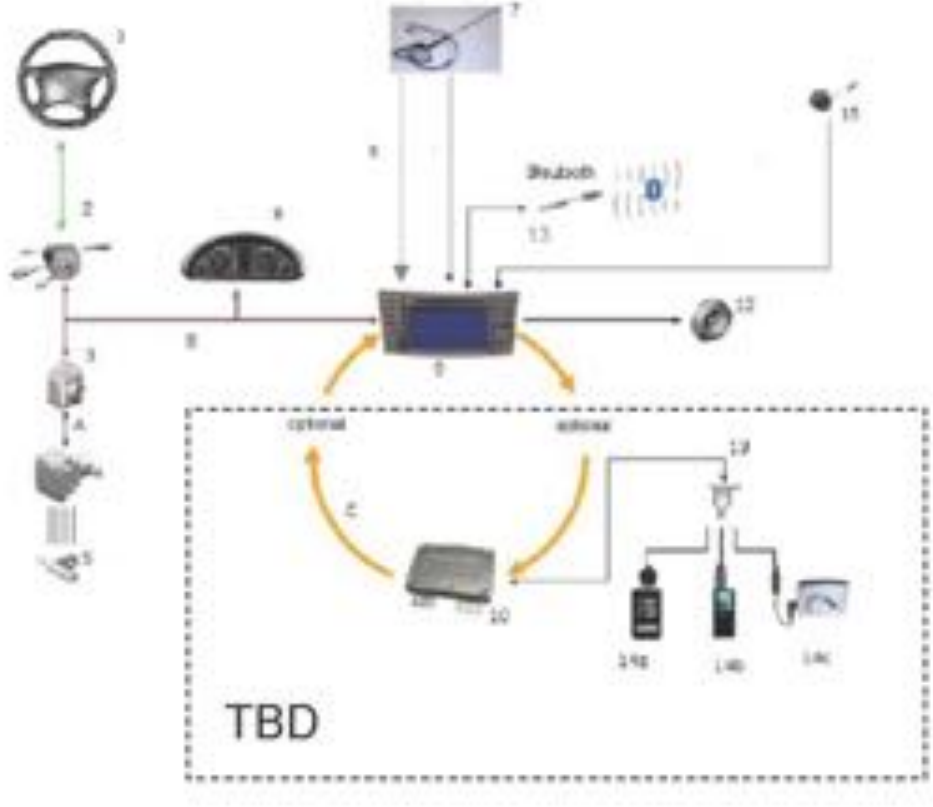

MY10 Telematics

- Sound 5 - AM/FM/CD
  - Monochrome LCD display
  - CD drive (MP3,WMA compatible)
  - AUX connection
  - Twin tuner / no diversity
  - Speed sensitive volume (from 20km/h)
  - 4 x 25 Watts output

MY10 Telematics

- Audio 20 NTG 2.5 AM/FM dual tuner/no diversity
  - CD drive (MP3, WMA compatible)
  - Bluetooth phone
  - 5" color TFT screen
  - AUX connection

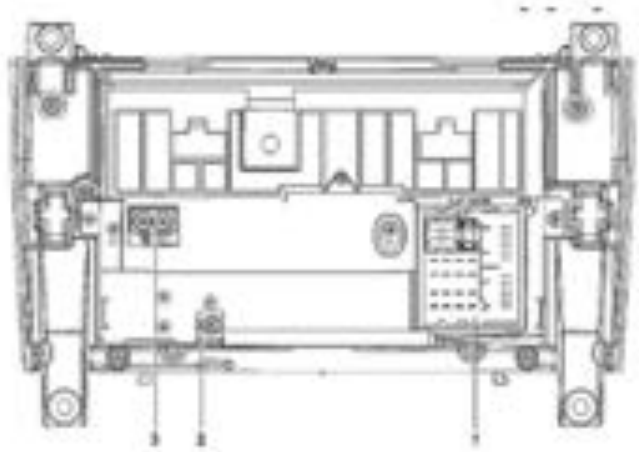

1 Combinations connector block 1 (MQS electrical terminals)
2 Bluetooth antenna connection
3 AM/FM antenna connection

MY10 Telematics

Combination connector, connector area 1, MQS 40 (electrical)

A Block A
B Block B
C Block C

Connector	Pin	Assignment
Block A	1	RR+ (AF rear right +)
	2	FR+ (AF front right +)
	3	FL+ (AF front left +)
	4	RL+ (AF rear left +)
	5	RR- (AF rear right -)
	6	FR- (AF front right -)
	7	FL- (AF front left -)
	8	RL- (AF rear left -)
	9	Interior CAN, LOW
	10	Telephone mute
	11	Interior CAN, HIGH
	12	Ubat -
	13	NOT ASSIGNED
	14	Interior CAN-Shield
	15	Ubat + (terminal 30)
	16	MOST wake up

Connector	Pin	Assignment
Block B	1	Microphone_1_In+
	2	Microphone_2_In+
	3	Microphone_shield
	4	Microphone_out_+
	5 - 6	NOT ASSIGNED
	7	Cradle_Compensator
	8	NOT ASSIGNED
	9	Microphone_ground
	10	Microphone_out_-
	11 - 12	NOT ASSIGNED
Block C	1	Reserved
	2	Fan – (external fan)
	3	Aux1-S (Aux-AF-Shield)
	4	Aux1-L (Aux-AF-left)
	5 - 6	NOT ASSIGNED
	7	Diag-fan (DIAGNOSIS ext. fan)
	8	Fan – (external fan)
	9	Aux1-Gnd (AUX-AF-Ground)
	10	Aux1-R (Aux-AF-right)
	11 - 12	NOT ASSIGNED

MY10 Telematics

- AM/FM antennas are housed in antenna amplifier A2/18 and wired directly to head unit
  - Passive design, actively amplified
  - Audio 20 / Sound 5 only contains dual tuner – no diversity
- Bluetooth antenna for phone (Audio 20)
  - Installed behind head unit
  - 2400MHz frequency
- Microphone for phone installed in OCP

Rear View Camera

- High mount rear view camera option
  - FR7 wire pre-installation option
  - Adapter available for high roof

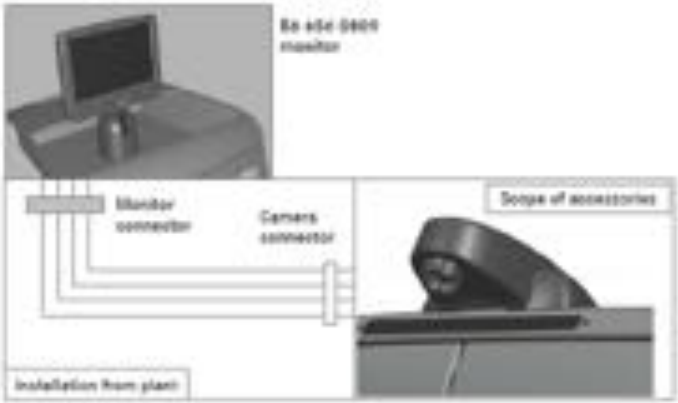

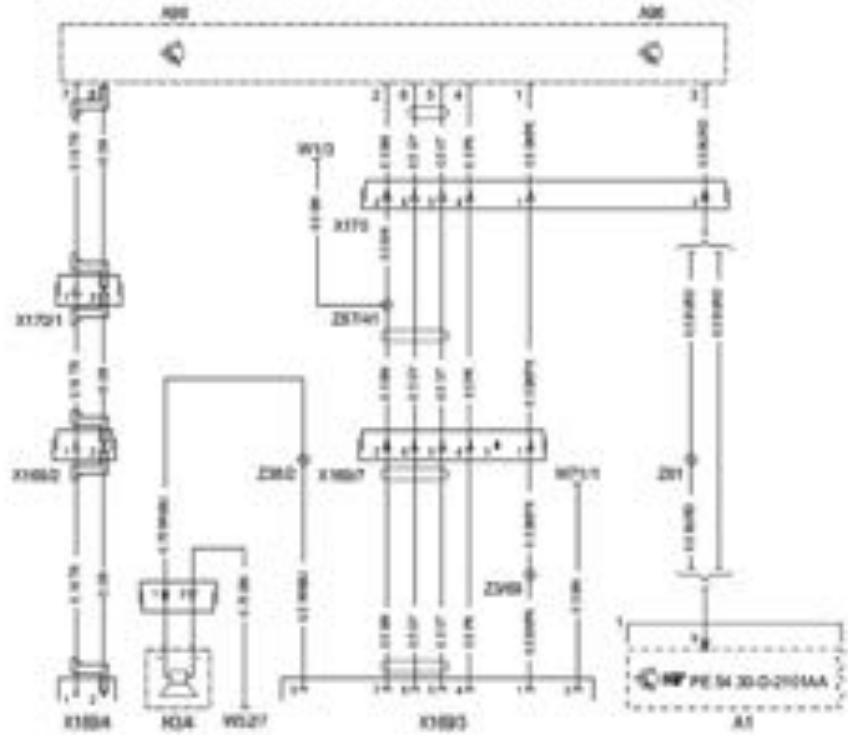

A1	Instrument Cluster	X169/4	Upfitter body builder connection 2
A96	Monitor back-up camera	Z38/1	Spice for back-up lamp
H3/4	Horn for back-up warning	Z51	Slice for speed signal
X169/3	Upfitter body builder connection 1		

Central Locking

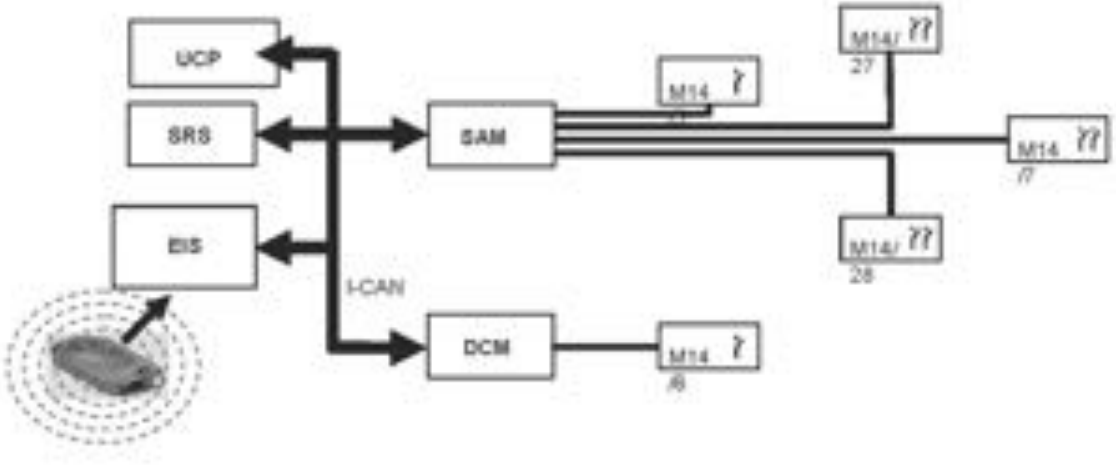

Central Locking

- **Central locking inside locking button**
  - In panel vans and passenger vans with integrated LED
  - 2 control circuits – cab/load compartment
  - LED indicates the status of the load compartment (locked)
  - No indication of the status of the overall vehicle
  - Upper rocker switch position for overall locking or unlocking
  - Lower rocker switch position for selective locking or unlocking (load compartment)
  - On models with driver cab/crew cab there is only one rocker switch position.

1 Overall vehicle button
2 Load compartment button

Central Locking

- You can activate and deactivate the global engine running-dependent locking feature by pressing and holding the top of the rocker switch for an extended period (approx. 5 s).
- You can activate and deactivate the engine running-dependent locking feature for the load compartment by pressing and holding the bottom of the rocker switch for an extended period (approx. 5 s).
- The ignition key must be in position 1 (terminal 15 R) and the vehicle speed must be 0 km/h.
- Feedback is given to confirm that the function parameter has been changed:
  - Global locking activated LED flashes 4 times
  - Global locking deactivated LED flashes 2 times
  - Selective locking activated LED flashes 4 times
  - Selective locking deactivated LED flashes 2 times

Central Locking

- Global unlocking:
  - Complete vehicle is unlocked
- Selective unlocking:
  - Drivers door is unlocked

- Programming of global/selective can only be done via Star Diagnosis.

1 Battery indicator lamp
2 Locking button
3 Button for unlocking rear-end and sliding doors
4 Mechanical emergency key
5 Unlocking button
6 Release button for mechanical

Central Locking

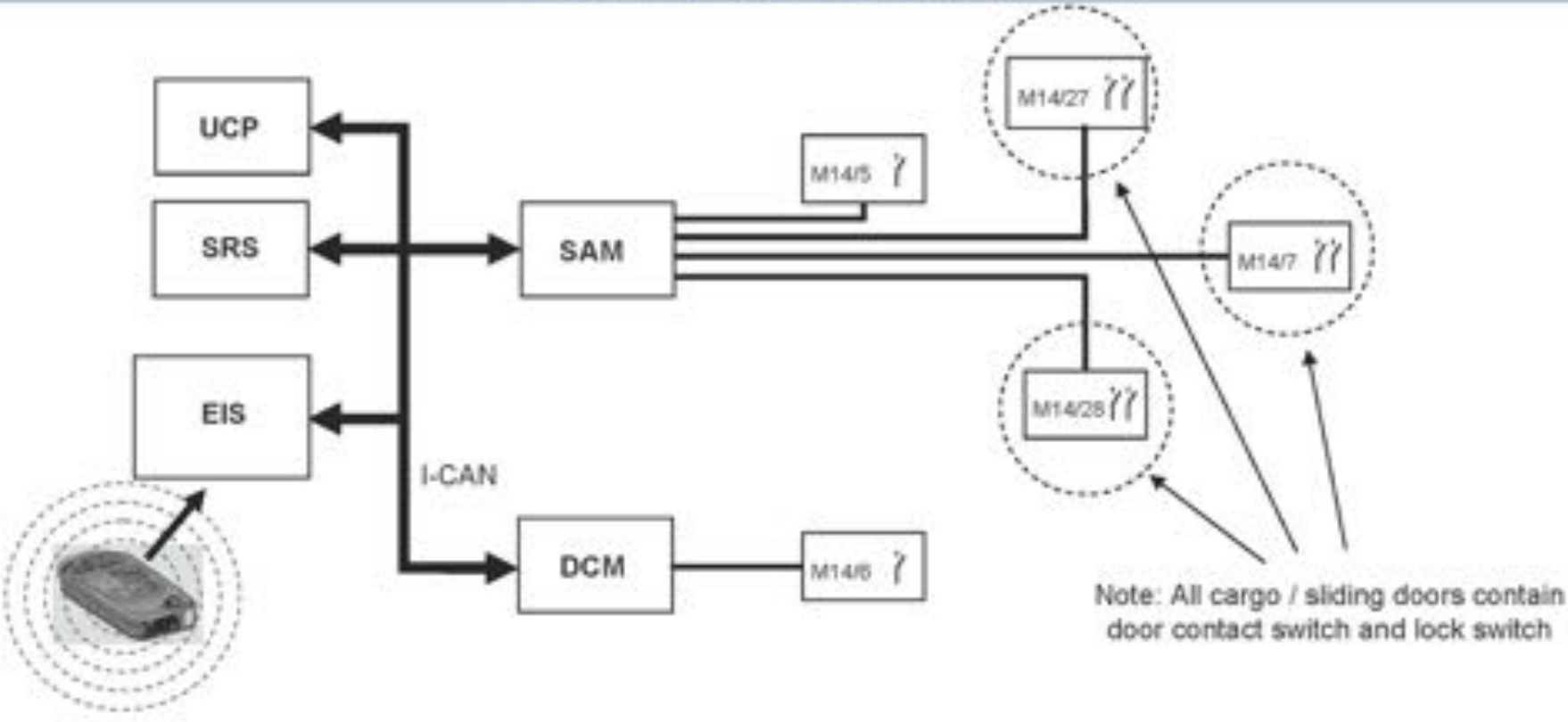

EIS	Electronic ignition switch
UCP	Upper control panel
SAM	Signal acquisition and actuation module
SRS	Airbag
DCM	Driver door control unit

M14/5	Front passenger door central locking
M14/6	Driver door central locking
M14/7	Rear-end door central locking
M14/28	Left sliding door central locking
M14/27	Right sliding door central locking

Anti-theft Alarm (ATA)

- ATA system includes:
  - interior ultrasound sensors (2 or 3)
  - inclination sensor
- Controlled by the OCP
- Armed automatically when the central locking system is operated.
  - approx. 30 seconds after the vehicle is locked by radio remote control.
  - indicated by three flashes of the turn signal lamps
- If persons or animals remain in the locked vehicle, the interior protection must be switched off to prevent false alarm
- Disarmed when the vehicle is unlocked using the remote control or the key is inserted in the EIS
- Battery-operated horn is not accessible from outside and is independent of the on-board electrical system. It will sound even if the main battery power supply is interrupted

Anti-theft Alarm (ATA)

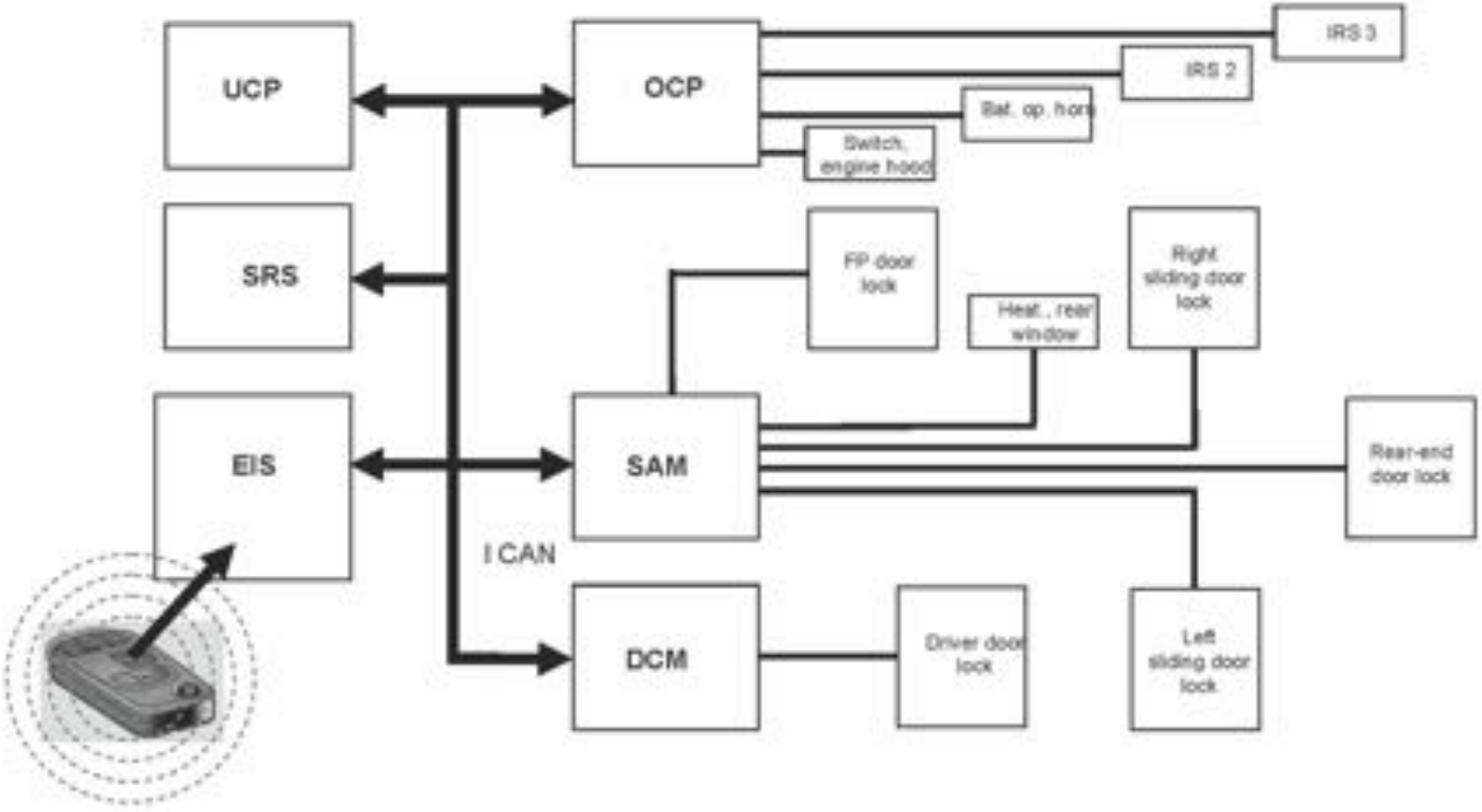

Drive Authorization System

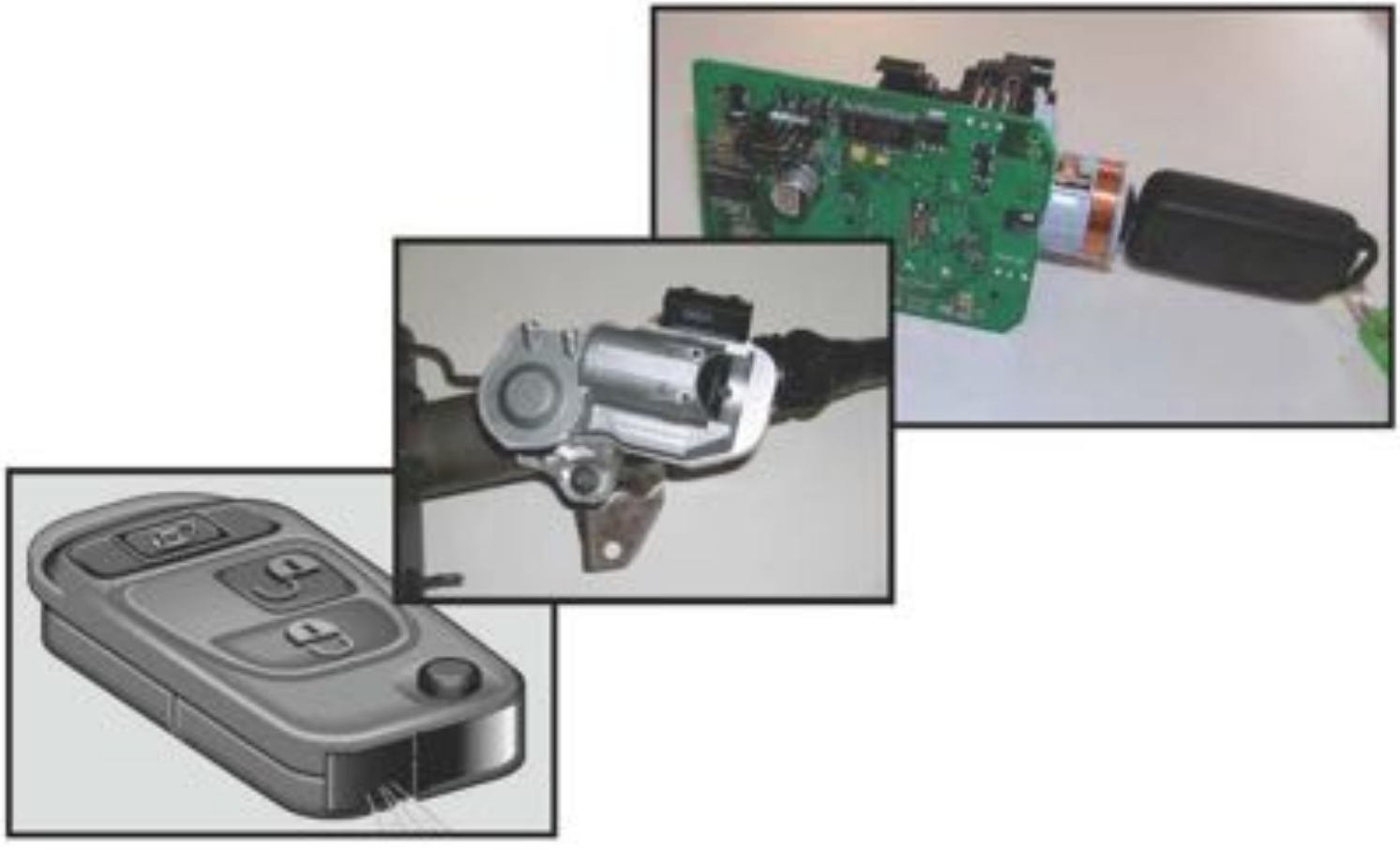

Drive Authorization System (DAS)

- The drive authorization system DAS is called FBS 2b
- Components of FBS 2b
  - Transmitter key with transponder
  - Electronic ignition/starter switch EIS (EZS)
  - Electric steering lock ESL (ELV)
  - Engine control module (CDI / ME)

Drive Authorization System (DAS)

- Electronic ignition/starter switch (EIS) has many other tasks apart from the switch function "Ignition on" and "Start"
  - Master control unit for the drive authorization system
  - Master control unit for the central locking
  - Gateway between the interior bus, engine bus and diagnosis bus
  - Receiver of the radio remote control
  - Stores the variant coding for the entire vehicle
  - Connection to the electrical steering lock ESL

Drive Authorization System (DAS)

- After inserting the key in the EIS, a coil is energized which supplies the key inductively with voltage.
- The transponder is now able to send his code.
- EIS has 8 places to store a transponder code. So, it is possible to use 8 keys with one vehicle.
- Learning and erasing transponder codes is done by Star Diagnosis

Drive Authorization System (DAS)

- EIS receives the transponder code from the key. It is compared with an existing code list.
- Data transfer between EIS and ESL to unlock the steering. At the end ESL sends a message "unlocked" and the EIS releases the rotation lock.
- After switching on ignition, a special code is transmitted, via the engine bus (M-CAN), from the EIS to the engine control unit, where it is checked.
- Drive authorization is only issued once this process has been completed.

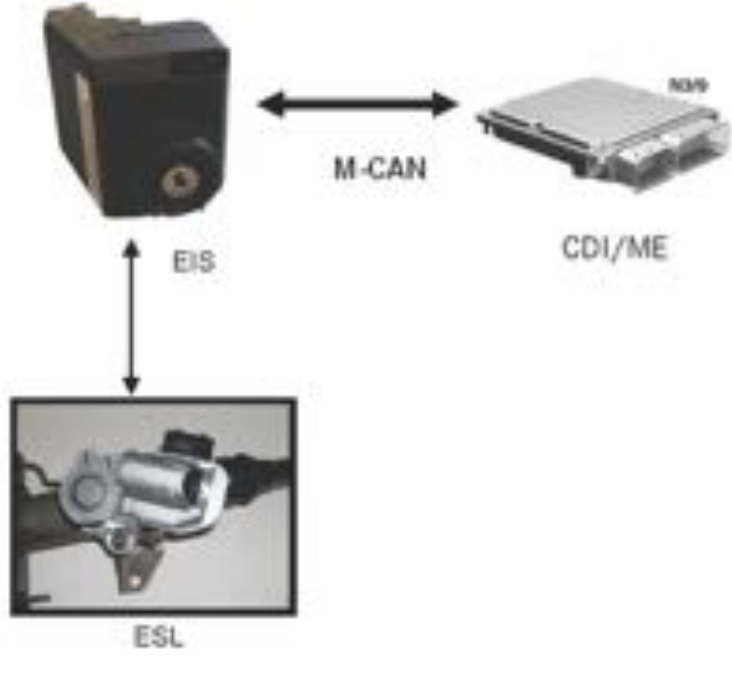

M-CAN	Engine bus (CAN C)
ESL	Electric steering lock (ELV)
EIS	Electronic ignition switch (EZS)
CDI/ME	Engine control unit

Replacing Theft Relevant Parts

- EIS
  - Order with VIN-number and electronic locking mechanism number
  - Enabling and programming with Star Diagnosis
  - Learning all keys with Star Diagnosis
- ESL
  - Order with VIN-number and electronic locking mechanism number
  - Enabling with Star Diagnosis
- Lost key
  - Disable the lost key by erasing the transponder code in EIS with Star Diagnosis
  - Order new key with VIN-number and electronic locking mechanism number
  - Enable new key with Star Diagnosis Synchronize radio remote by :
    - Pressing any button to send
    - insert the key in EIS
    - switch to pos. 1 (circuit. 15r)
    - switch off and pull key out

Drive Authorization System (DAS)

- Inductive coil used of power up key transponder once inserted into EIS
- EIS has 8 key tracks
- Each key track can be overwritten with a replacement key
- Total of 8 keys can be utilized per EIS at any given time
- EIS is replacable up to 8 times
- After 8 EIS replacements CDI control module will also have to be replaced

Acronyms

AAC	Automatic air conditioning control module
ATA	Anti Theft Alarm
CAN	Controller Area Network
CDI	Common Rail Diesel Injection
DAS	Drive Authorization System
DCM	LF door control module
EIS	Electronic ignition switch
ESM	Electronic Shifter Module
ESP	Electronic stability program
ETC	Electronic transmission control module
HRA	Headlamp Range Adjustment
IC	Instrument cluster
LIN	Local Interconnect Network
NTG	New Telematics Generation
OCP	Overhead control module
PSM	Paramiterizable Special Module
PTS	Parktronic
SAM	Signal Acquisition Module
SCM	Steering column module
SRS	Supplemental Restraint System
TPMS	Tire pressure monitoring control module
UCP	Upper control panel

OM642

OM642.898 Overview

185 hp @ 3,800 rpm

325 lb-ft @ 1,400 – 2,400 rpm

Example of torque

OM642.898 Overview

- Aluminum crankcase with cast in iron cylinder liners
- 72° crank angle
- Balance shaft
- VTG exhaust turbocharger with electrical adjuster and charge air cooling
- Electrically controlled exhaust recirculation valve for exhaust gas recirculation
- Electrically controlled intake air throttling
- Electrically controlled intake port shutoff (EKAS)

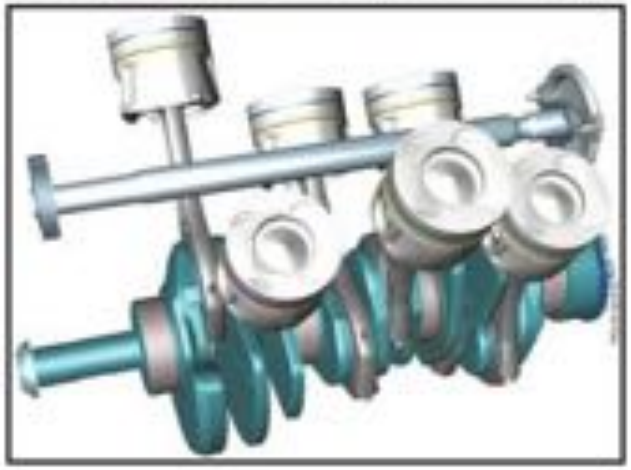

OM642 Overview

- 4 valves per cylinder with 2 camshafts per cylinder bank
- Common rail direct injection CDI 6 with up to 5 injections per cycle
- Instant start glow system (ISS)
- Maximum peak pressure in the combustion chamber up to 150 bar
- Crankcase ventilation with centrifugal oil separator

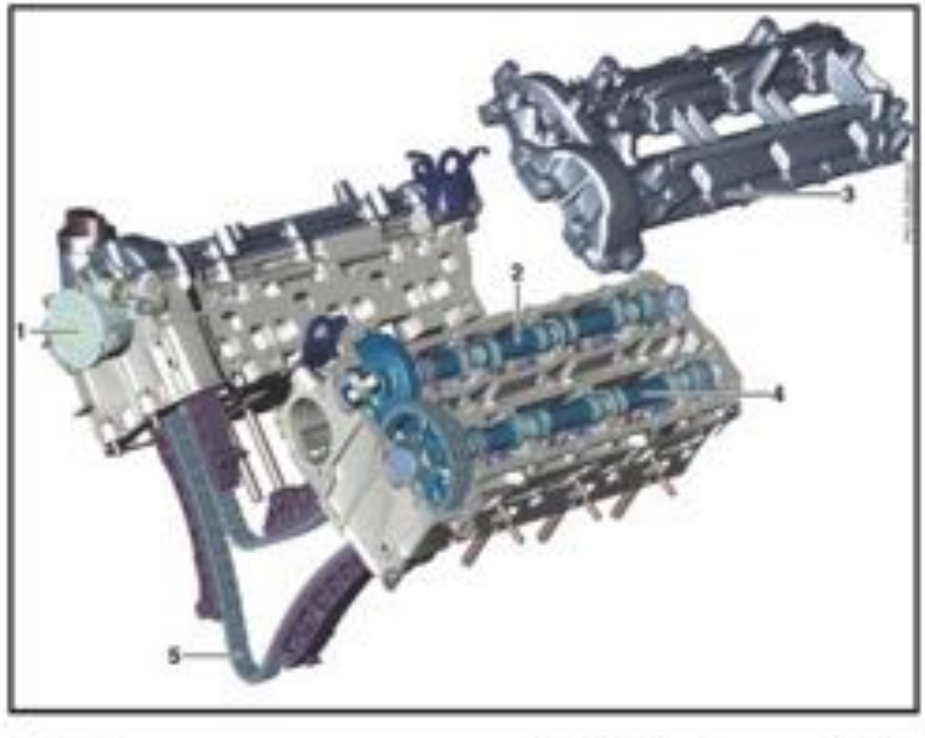

1 – Vacuum
2 – Intake camshaft
3 – Cylinder head cover with cam bearings
4 – Exhaust camshaft
5 – Timing chain

Crankcase Ventilation

Crankcase gases are fed to the intake manifold through the:

- Hollow intake cam (1)
- Oil separator (2)
- Pressure regulator (3)
- Vent line (4)
- Crankcase ventilation heating element (5)

The vent line heater is controlled by the CDI control unit

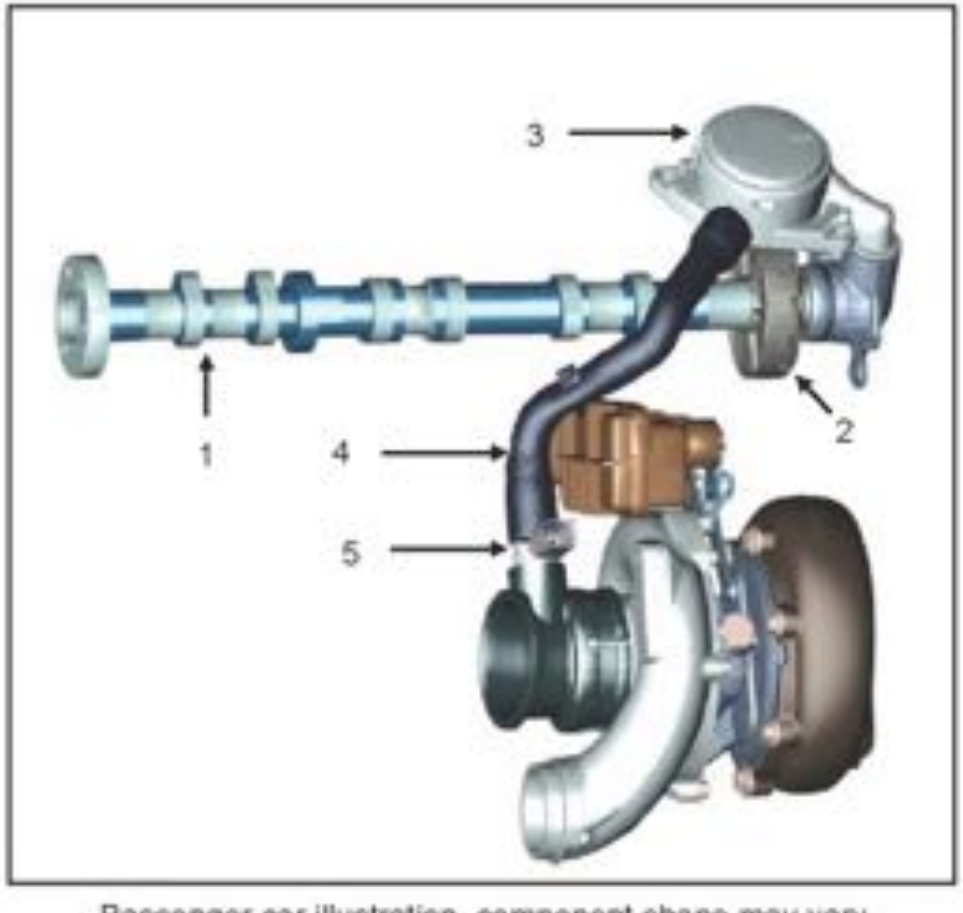

Passenger car illustration, component shape may vary

Fuel System Overview

19	High pressure pump
19/1	High pressure pump drive
21	Rail
70	Fuel filter
80	Fuel tank
80/4	Suction jet pump
80/5	Swirl pot
80/11	Fuel strainer
B4/17	Rail pressure sensor
B50/6	Fuel temperature sensor
M3/5	Fuel pump
Y74/6	Pressure regulator valve
Y76	Fuel injector
Y94/4	Quantity control valve

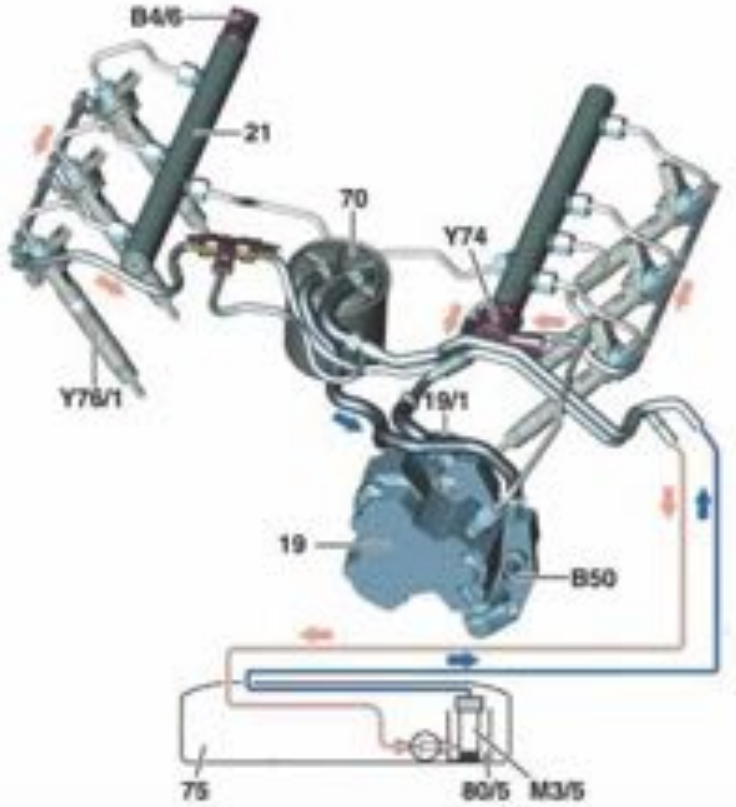

Warning – use of gasoline, kerosene, biodiesel (B6-100) and/or Low Sulfer diesel will cause damage not covered by warranty.

Low Pressure Fuel System

Includes the following fuel system components:

- 80/5 – Swirl pot
- M3/5 – Electric fuel pump
- 70 – Fuel filter
- 19 – High pressure pump with regulation valve
  (See next slide for details)
- B50/6 – Fuel temperature sensor
- Y94/4 – Quantity Control Valve
- Fuel lines (supply and return)

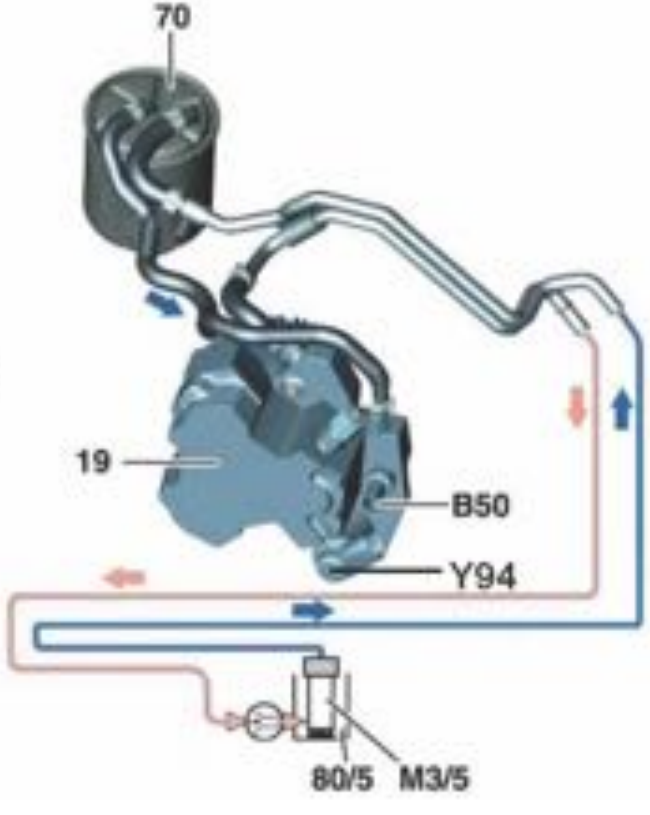

Fuel Tank and Pump

Includes the following fuel system components:

- 80/5 – Swirl pot
- M3/5 – Electric pump
- 25 Gal Fuel tank
- Suction jet pump

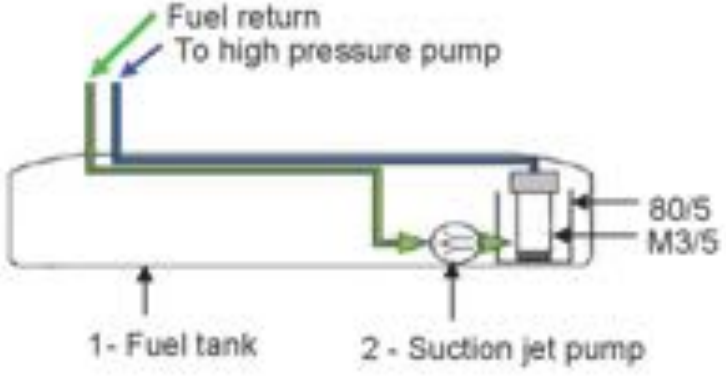

Located on left side of vehicle

Low Pressure Fuel System

Components located on the High Pressure Pump

Fuel temperature sensor
B50/6

Quantity control valve
Y94/4

Low Pressure
Regulating Valve

Fuel Filter

Fuel Inlet

Fuel drain line

Water Sensor/
Fuel Heater

Fuel outlet

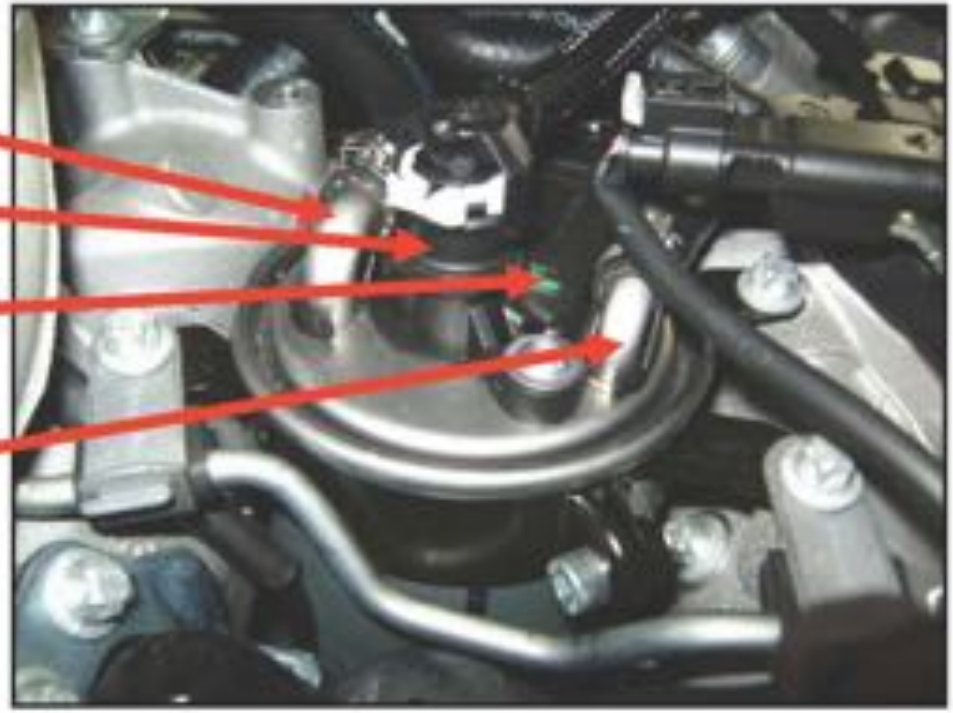

Located in front of the turbocharger

Filter drain valve
Located near the dipstick
Right side of engine

Leak Oil Line

- Prior to the filter, fuel is supplied to injectors through a throttle and the leak oil lines

During Engine start:

- Leak oil line acts as supply line when fuel pump runs
- Supplies approx. 58 psi (4 bar) to the injector's coupling unit to ensure clearance between piezo unit and valve unit

Engine running:

- High pressure supplied to the coupling unit
- Pressure in leak oil line from the injector is held by an orifice in the fuel T(1) between 5 bar at idle and 10 bar at full load
- Return quantity is with the piezo injector is ~0.026 gph

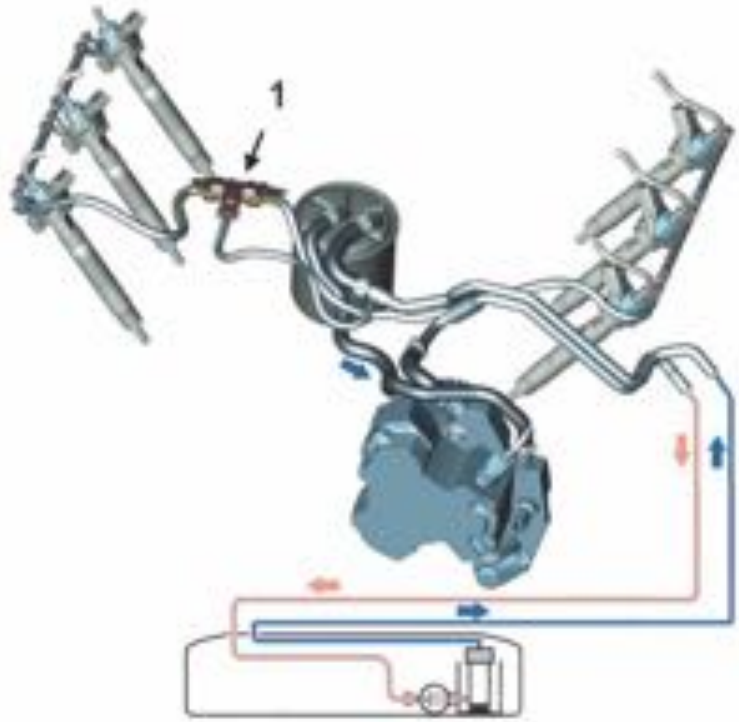

Leak Oil Line

Leak Oil Lines Repair Notes

Do not remove a leak oil line or **pinch** the line shut while the engine is running
(The back-flow pressure will raise up to 8 -10 bar)
To disconnect the leakage line (2) from the fuel injector pull the snap ring (1) bottom-up first (picture B).

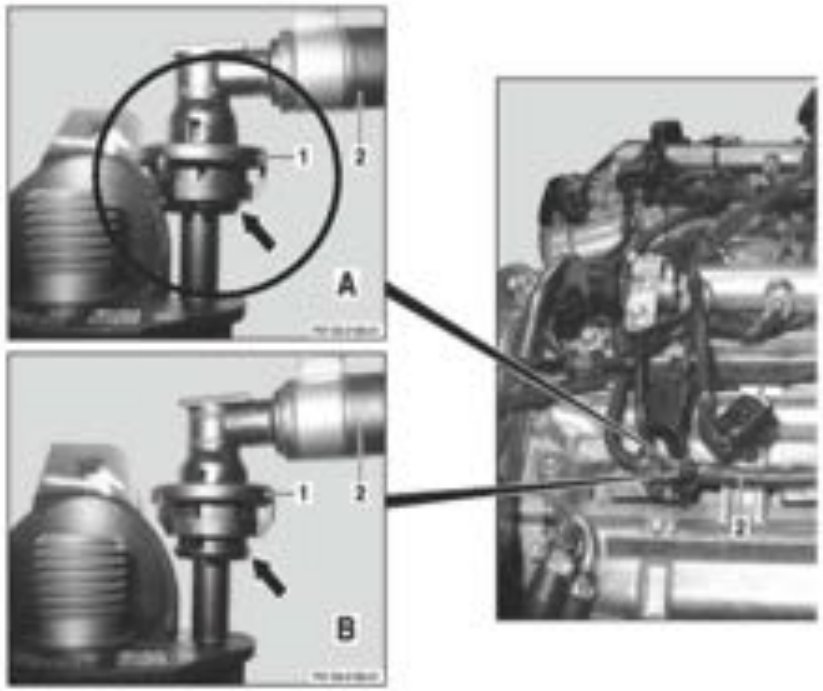

The connection is locked correctly in picture A.
Note: To check the correct connection take a look from the top.
If there is a white ring still visible, the leakage line is not locked.

The leak oil line is available as one part only!

Service Note

Common Rail System Repair Work Note

- There is a leakage test kit available for this system
- Never compress leakage lines, piezo actuator will damage immediately due to high back-flow pressure (35 - 40 bar)
- High pressure component faults are minimal if a fault is recorded, check low pressure system first, possible causes could be;
  - Diesel fuel quality/contamination
  - Fuel pump circuit
  - Fuel filter
  - Return flow pipe and/or fuel delivery module

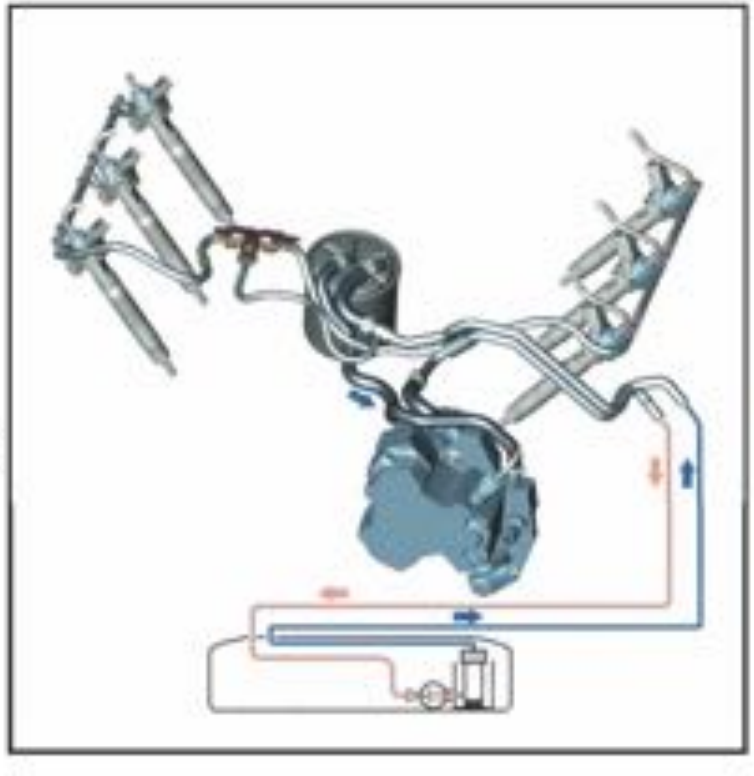

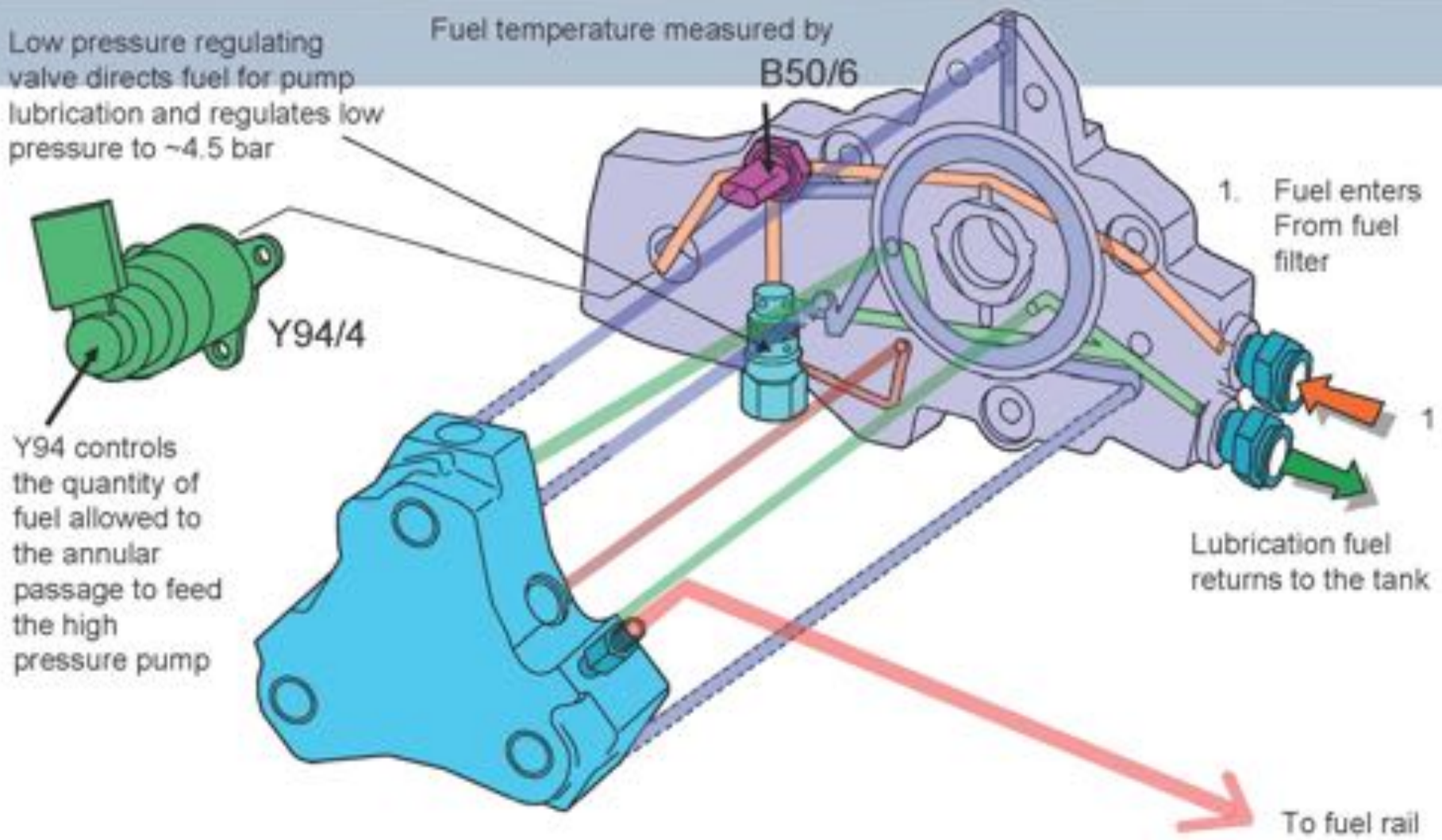

Pump operation

High Pressure Pump

High Pressure Fuel System

Includes the following fuel system components:

- High pressure pump (19)
- High pressure fuel lines
- Fuel rails (Left and Right)
- Pressure Regulating Valve (Y74/6)
- Piezo fuel injectors (Y76/18 - 23)
- Rail pressure sensor (B4/17)

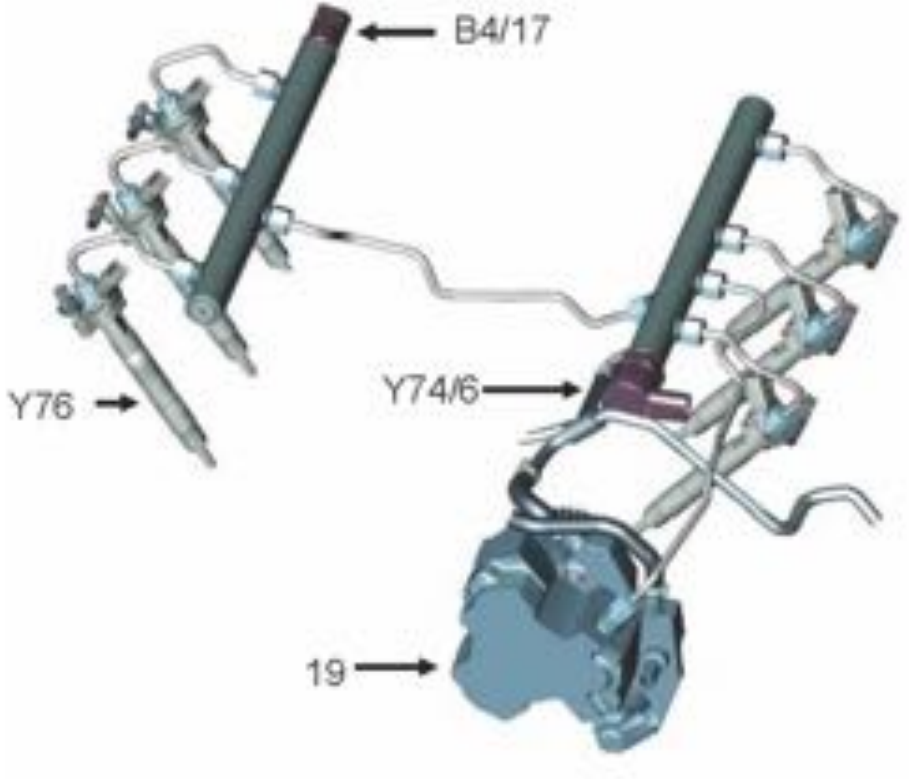

Pressure Regulator Valve (Y74/6)

- Located in the fuel rail, the pressure regulator valve is spring loaded in the open position to allow for fuel expansion and retraction of the fuel at rest
- CDI control unit (N3/30) controls magnetic force which controls opening and the fuel pressure during operation
- In de-energized state the valve opens

Note: Pressure regulator valve cannot be replaced individually but only with the rail

Pressure regulator valve (Y74/6)

Quantity Control Valve (Y94/4)

- Located in the high pressure pump
- CDI control unit regulates the quantity of fuel fed to the high pressure pump via a PWM signal according to demand

Quantity control valve (Y94/4)

Fuel Rail Pressure Regulation

- Rail pressure regulation occurs via either the pressure regulator valve (Y74/6) or quantity control valve (Y94/4)

- Regulation with pressure regulator valve (Y74/6)
  - up to 30s after engine start
  - fuel temperature > 68°F (20°C)
  - idling (with exceptions)
  - decel mode

- Regulation with quantity control valve (Y94/4)
  - after 30s of engine running
  - fuel temperature > 68°F (20°C)
  - in "Normal" driving mode
  - > 1200 RPM or injection quantity > 15.5 mm^3 / intake stroke (hub)
  - not in decel mode

Pressure regulator valve (Y74/6)

Quantity control valve (Y94/4)

High Pressure Fuel System

Fuel Rails - both rails are equipped with throttles (0.8 mm) to reduce pressure waves. Only the drain on the left rail has no throttle (connection to the right rail).

Note: Consider the throttles in the rails as potential places for blockage when diagnosing performance complaints

Rail pressure sensor

High Pressure Fuel System

High pressure fuel line

Piezo Injector

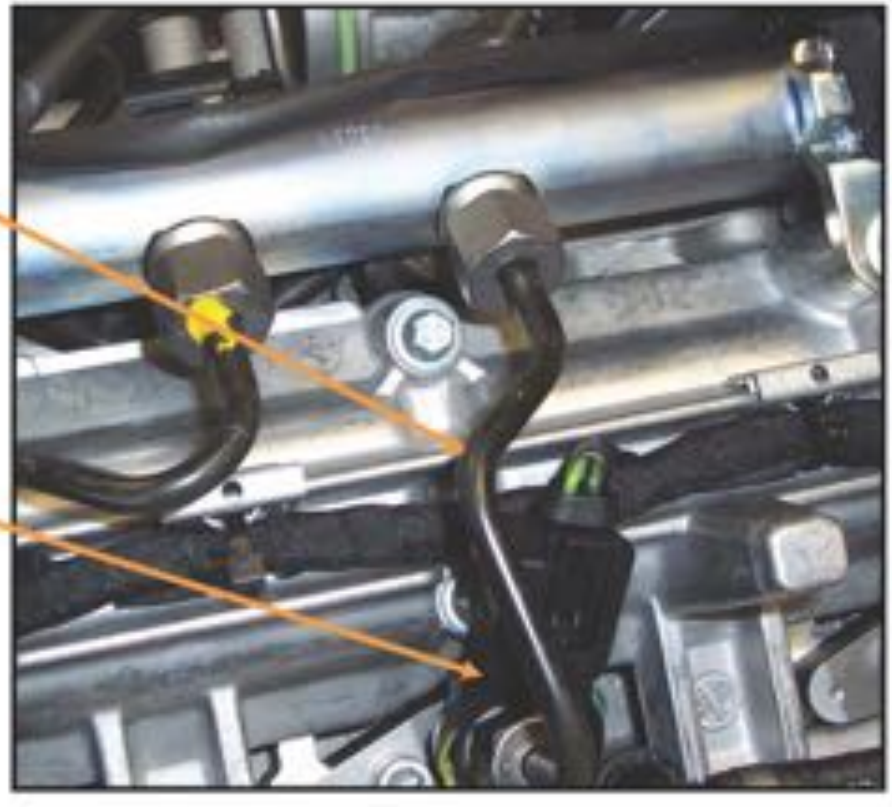

Piezo Fuel Injector (Y76)

Fuel injector (Y76)

- Fast-switching piezo actuators
- Applying voltage opens nozzle needle
- Small fuel quantities achieved via very fast opening
  - achieved with high voltage
- Technical details per injector:
  - max. voltage: approx. 200 volts
  - max. current: approx. 15 A
  - internal resistance: approx. 180 K ohm
  - 8 hole nozzle

Note:
Never disconnect injectors with "Ignition ON" due to high voltage!

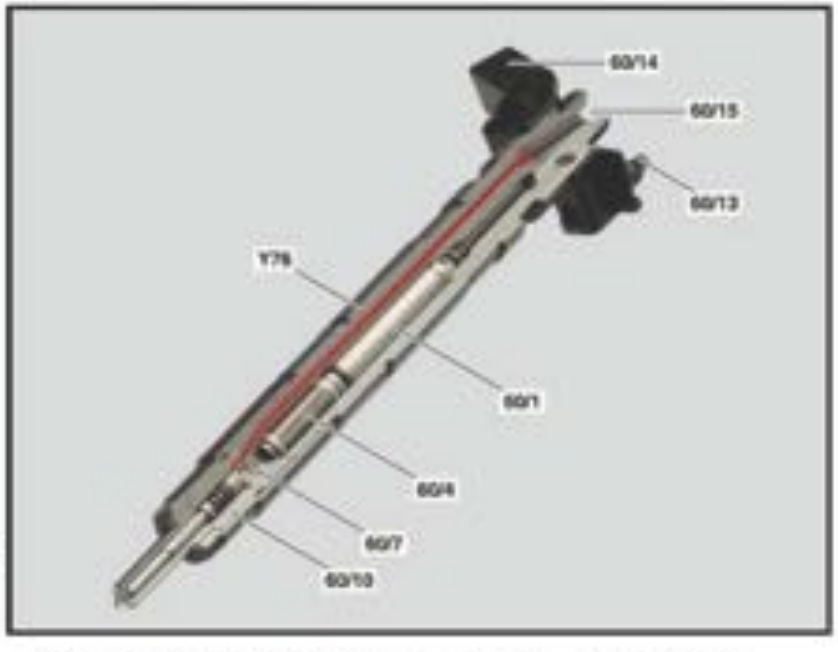

60/1	Actuator module	60/14	Connector
60/4	Coupler module	60/15	High-pressure line connection
60/7	Valve group		
60/10	Nozzle module	Y76	Piezo fuel injector
60/13	Return		

Piezo Fuel Injector (Y76)

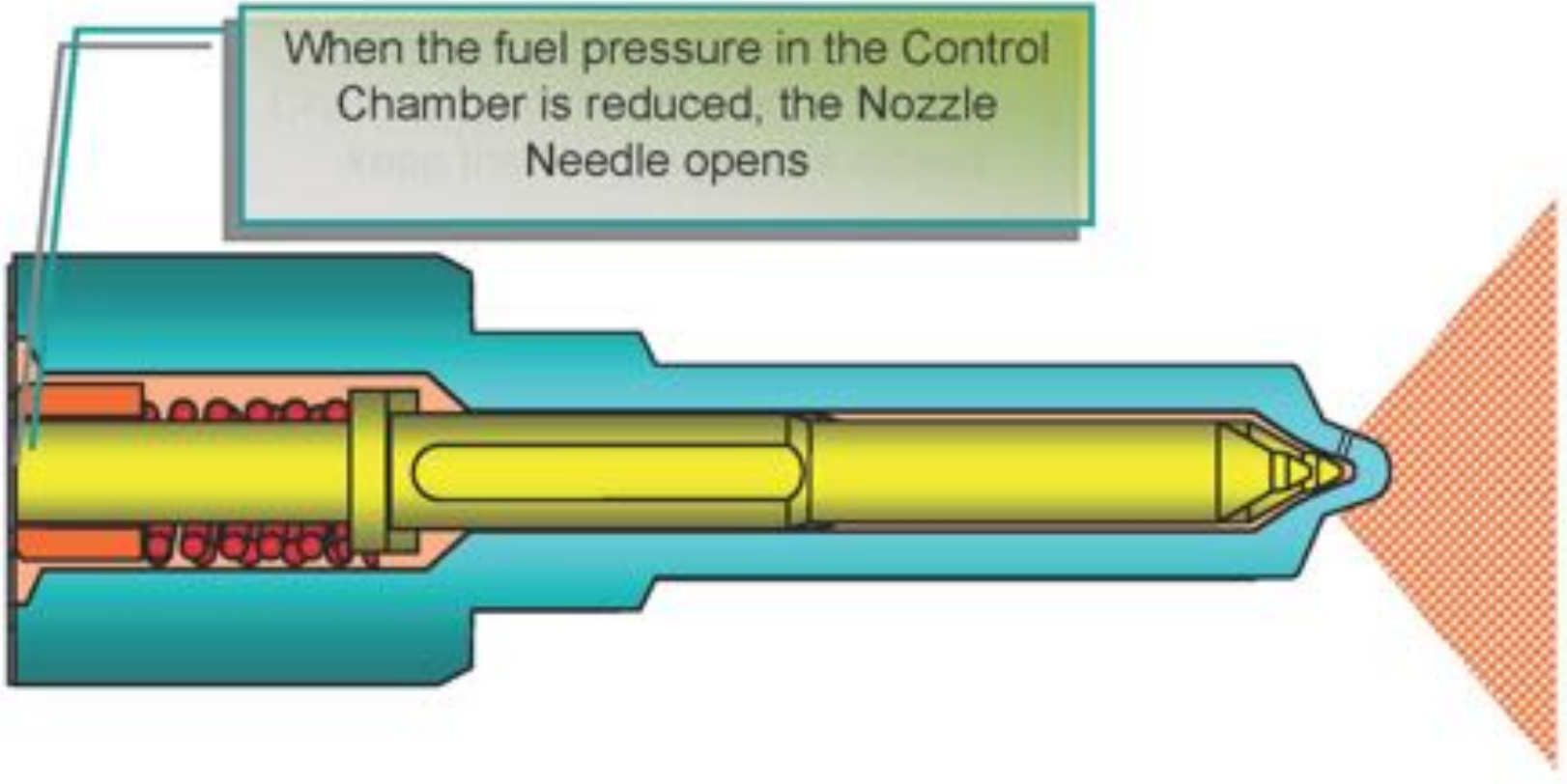

Injector 7 Digit Adjustment Value

To ensure proper injector calibration, two correction functions are contained within the 7-digit adjustment value:

- Correction of electrical units (ISA)
- Correction of mechanical units (IMA)

These correction factors allow for production tolerances and drift compensation

After replacing an injector, the coding number of the new injector must be entered in the CDI control unit. If the coding is not entered, the following complaints are possible: rough running, noisy injection and power loss

ISS Glow Plug System

ISS (Instant Start System) glow plug system is used to determine and control the following glow situations:

- Preglowing
- Ready-to-start glowing
- Start glowing
- Afterglowing
- Diesel particulate filter glowing
- Emergency glowing
- Diagnosis

N14/3

ISS Glow Plug System Processes

Preglowing - Heats the glow plugs as soon as circuit 87 is turned on. Full voltage

Ready-to-start glowing - After preglowing until engine start. Pulsed power

Start glowing - Glow during starting

Afterglowing - Improves running after cold start

Diesel particulate filter glowing - Glow plugs heated to 850°C to support DPF regeneration

Emergency glowing - If a LIN bus error occurs, emergency function is triggered

Diagnosis – (DAS system diagnosis) Glow plugs energized at a low temperature using the SDS for diagnostic, independently of coolant temperature

Glow Plug System

The glow time output stage (N14/3) receives the following information over a LIN bus from the CDI (N3/30) control unit:

- RPM
- Engine load
- Coolant temperature

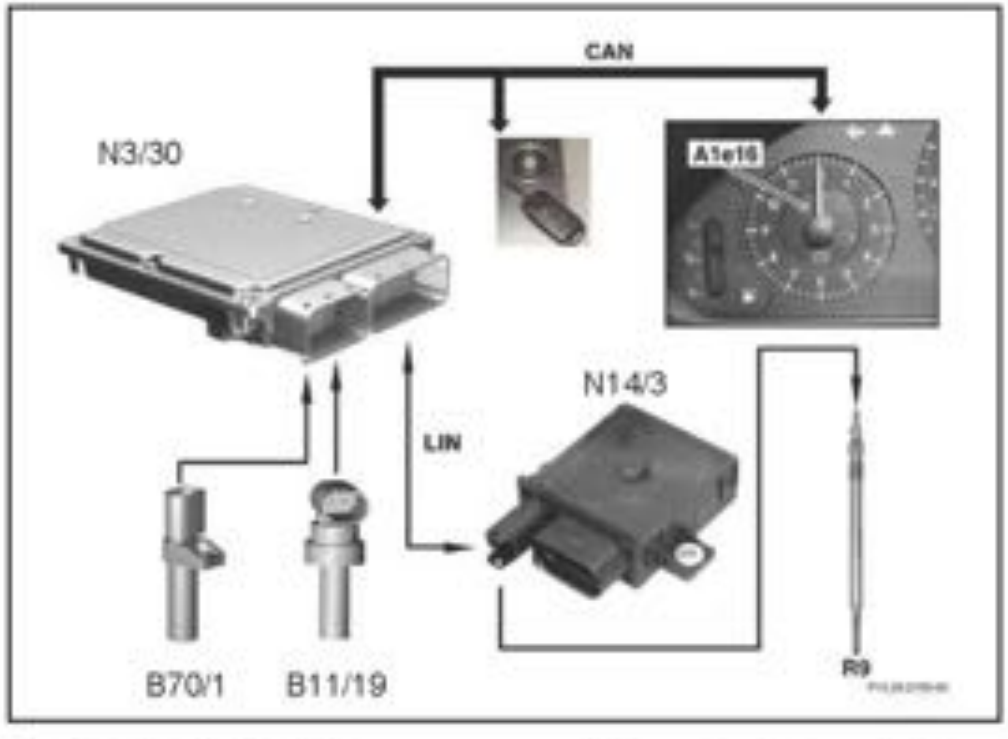

A1e36	Preglow indicator	N14/3	Glow time output stage
B11/19	Coolant temp sensor	R9	Glow plugs
B70/1	Crankshaft position sensor	LIN	Local-interconnet Network
N3/30	CDI control unit		

ISS Glow Plugs

ISS (Instant Start System) glow plugs (R9/1-6)

The rated voltage is 4.5 V, the switch-on current is < 35 A, the steady-state current is < 10A.

Note: The ISS glow plugs must only be operated via the control unit !

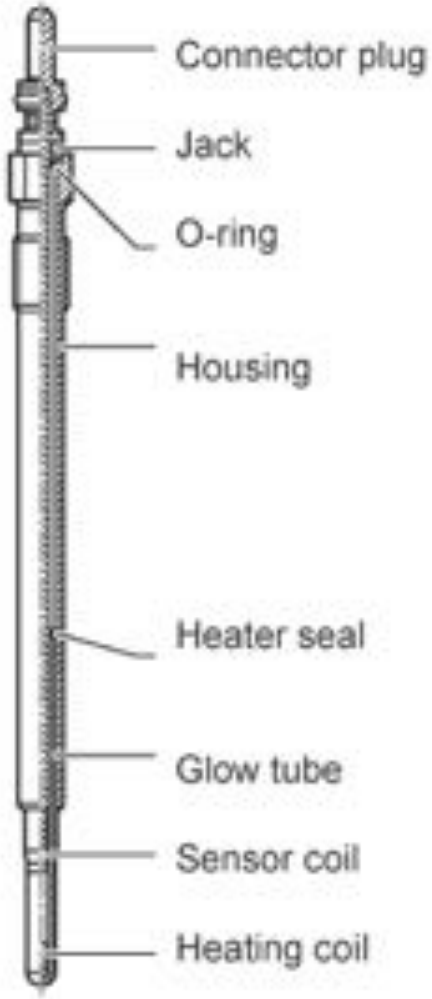

Fuel Control: Engine Start

- Electric fuel pump (M3/5) supplies fuel through the fuel filter to the high pressure pump
- Pressure relief valve in the high pressure pump regulates fuel to maintain approx. 65 psi (4.5 bar)
- High pressure pump supplies fuel at approx. 4351 psi (300 bar) to fuel rails and inlet side of fuel injectors
- High pressure is regulated via Y74/6 and monitored via B4/17
- CDI control unit actuates injectors

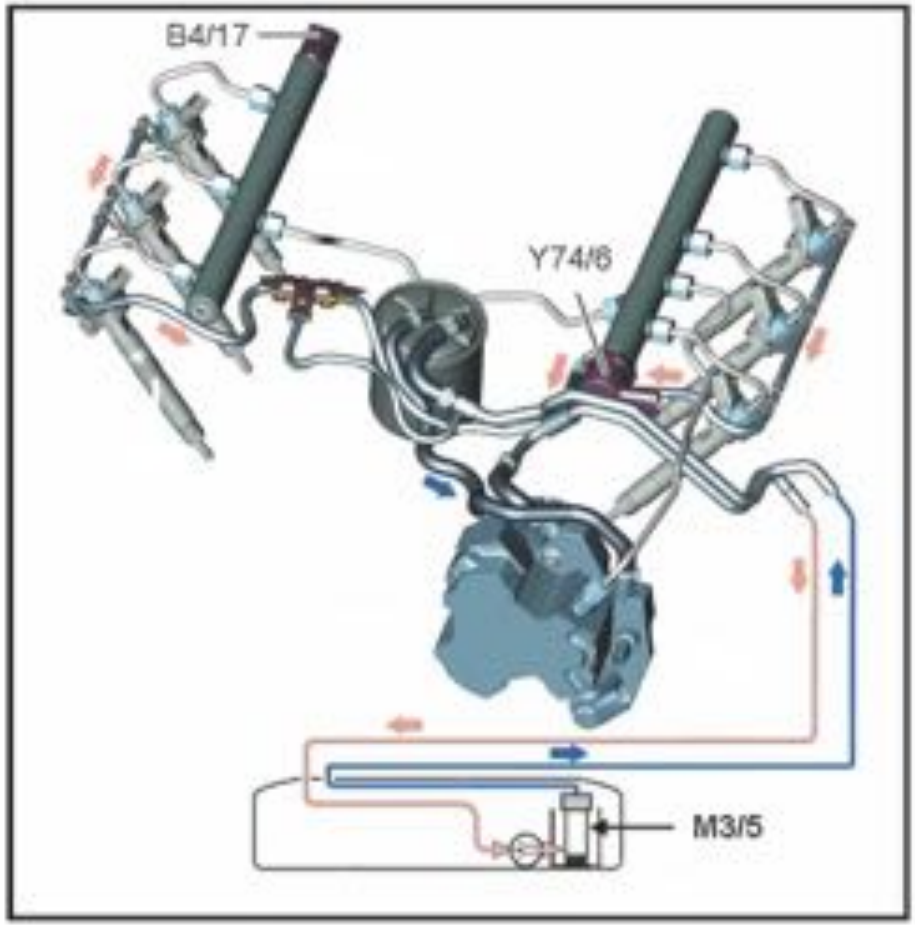

Fuel Control: Engine Running

- High pressure fuel enters left rail which is connected to right rail via a high pressure line
- B4/17 monitors pressure
- Y74/6 (located on the left rail) regulates rail pressure
- Y94/4 allows full fuel flow to the high pressure pump
- Low pressure at return side of injectors becomes return fuel

Note:
Injector pipes must be fastened with the correct torque or you might narrow the orifices in the rails!

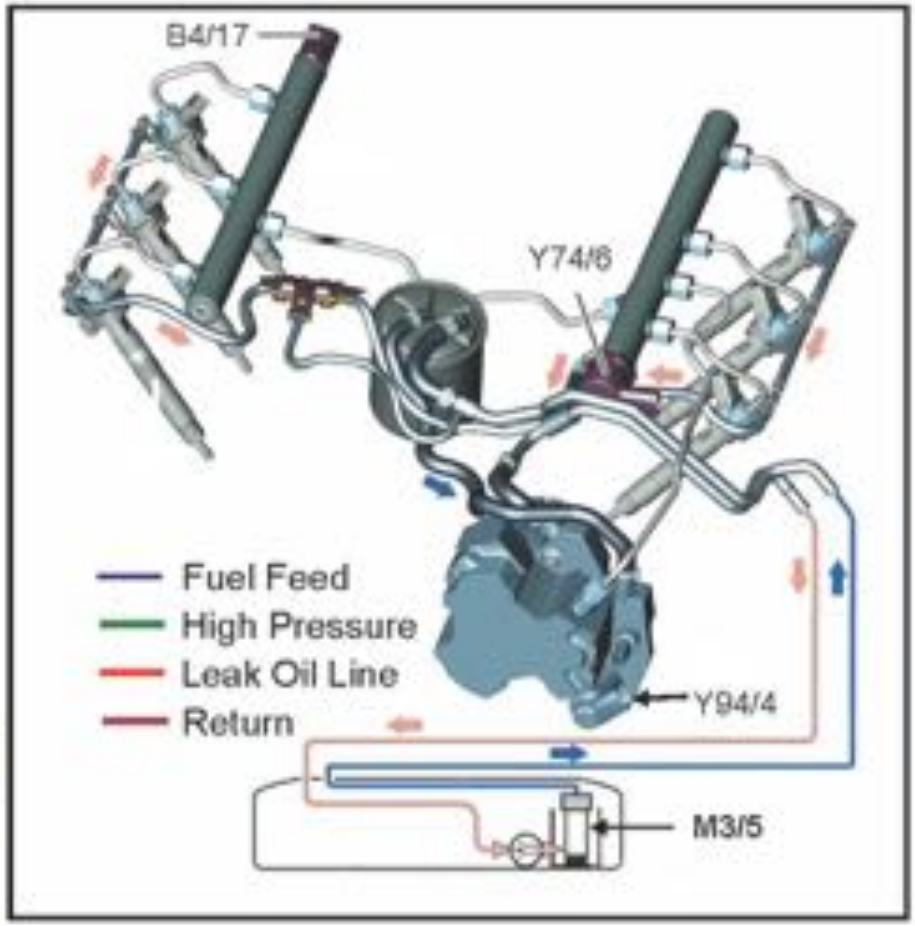

CDI Control Unit (N3/30)

The CDI control unit's main functions are:

- Injection time and volume
- Injection pressure
- Delivery rate of high pressure pump
- Idle speed control
- Smooth running control
- RPM limitation
- Decel fuel shutoff
- Rail pressure control
- Air control
- Cruise control
- Diagnosis (OBD)
- DEF regulation
- Alternator LIN
- Glow plug
- EGR
- Fan Control

CDI Control Unit (N3/30)

The CDI Control Unit

- has two internal sensors
  - Temperature sensor
  - Atmospheric pressure sensor (For altitude adjustment)

- communicates over the CAN with:
  - Instrument cluster (A1)
  - Electronic Shift Module
  - ESP control module
  - Electronic Ignition Switch
  - Steering column control module (N80)
  - Transmission control module

- communicates over the LIN network with
  - Alternator (G2/7)
  - Glow time output stage (N14/3)

Mixture Formation

Injection quantity calculated from the following variables:

- Engine load
- Engine speed
- Coolant temperature
- Boost air temperature
- Charge air pressure
- Rail pressure
- Fuel temperature
- Atmospheric pressure

N3/30 - Inputs/Outputs

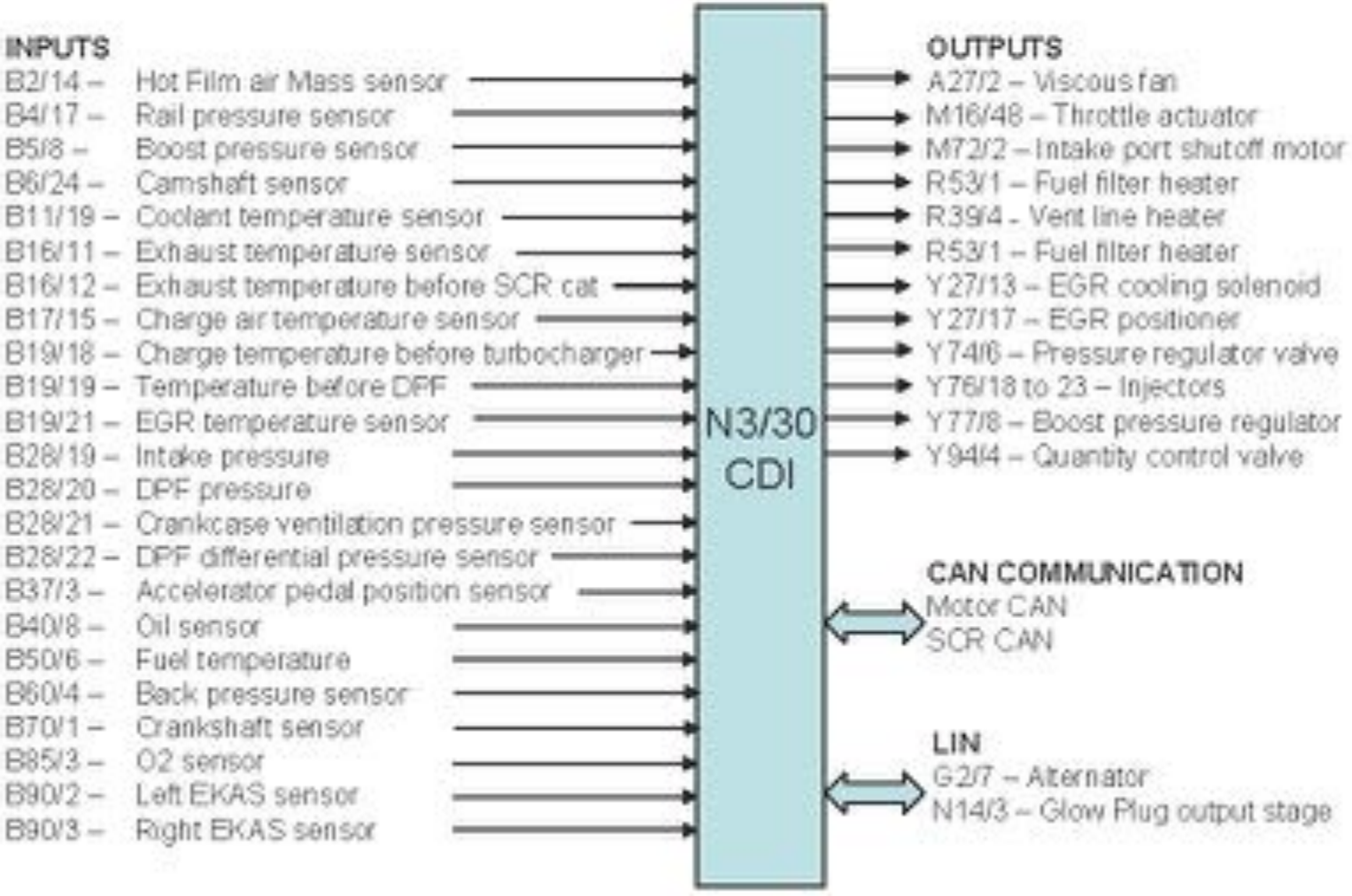

Viscous Cooling Fan (A27/2)

The cooling fan is a viscous type that the CDI control unit (N3/30) monitors and can electronically influence based on:

- Coolant temperature
- Refrigerant pressure
- Oil temperature
- Boost air temperature
- Engine speed
- Fan speed
- Vehicle speed

Note: What appears to be a heavy gauge wire going to the manifold is a torque strap to prevent rotation of the clutch assembly.

Viscous Cooling Fan (A27/2)

The clutch is driven by the motor (1)

Speed monitored by sensor (2)

Friction connection created by oil quantity in the working area (3)

- More oil = higher fan speed
- Less oil = lower fan speed

The CDI control unit (N3/30) controls the solenoid (4) via a PWM signal

The oil returns from the working area via the return ducts (5)

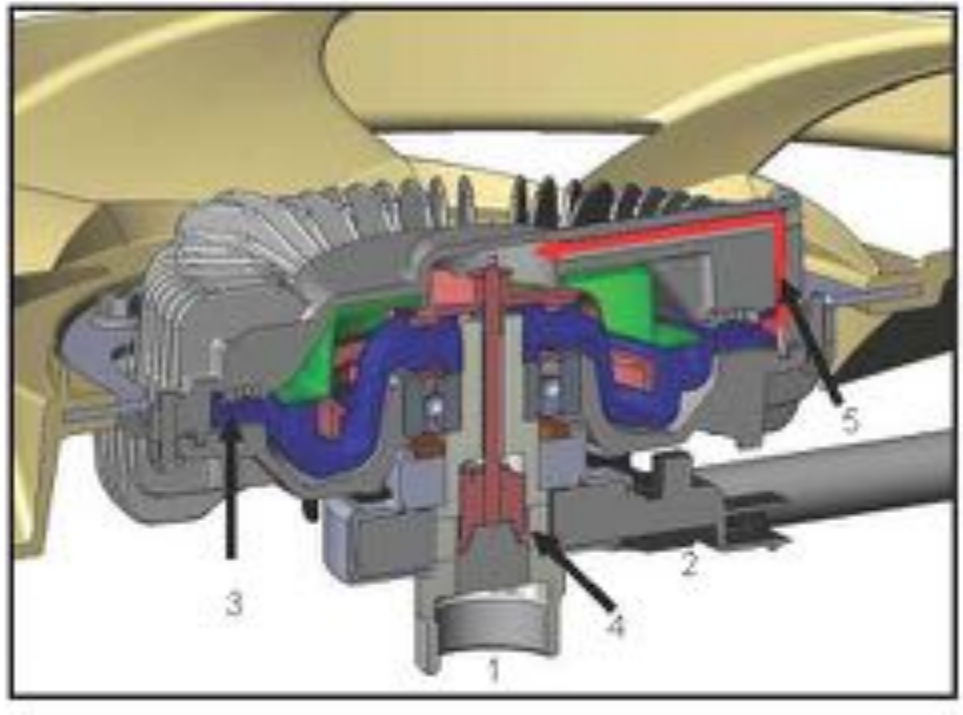

Intake System

1 Air intake
2 Air filter
3 Hot Film Air Mass sensor (B2/14)
4 Heated crankcase vent line
5 VTG Turbocharger
6 Pulsation damper
7 Charge air cooler
8 Throttle valve (M16/48)
9 Charge air distribution lines
10 Intake port shutoff
11 Expansion compensators
12 EGR valve with by-pass
13 EGR cooler
14 Vent line (Coolant)
15 Coolant to Radiator
16 Coolant thermostat
17 Coolant line from heater core
18 Exhaust

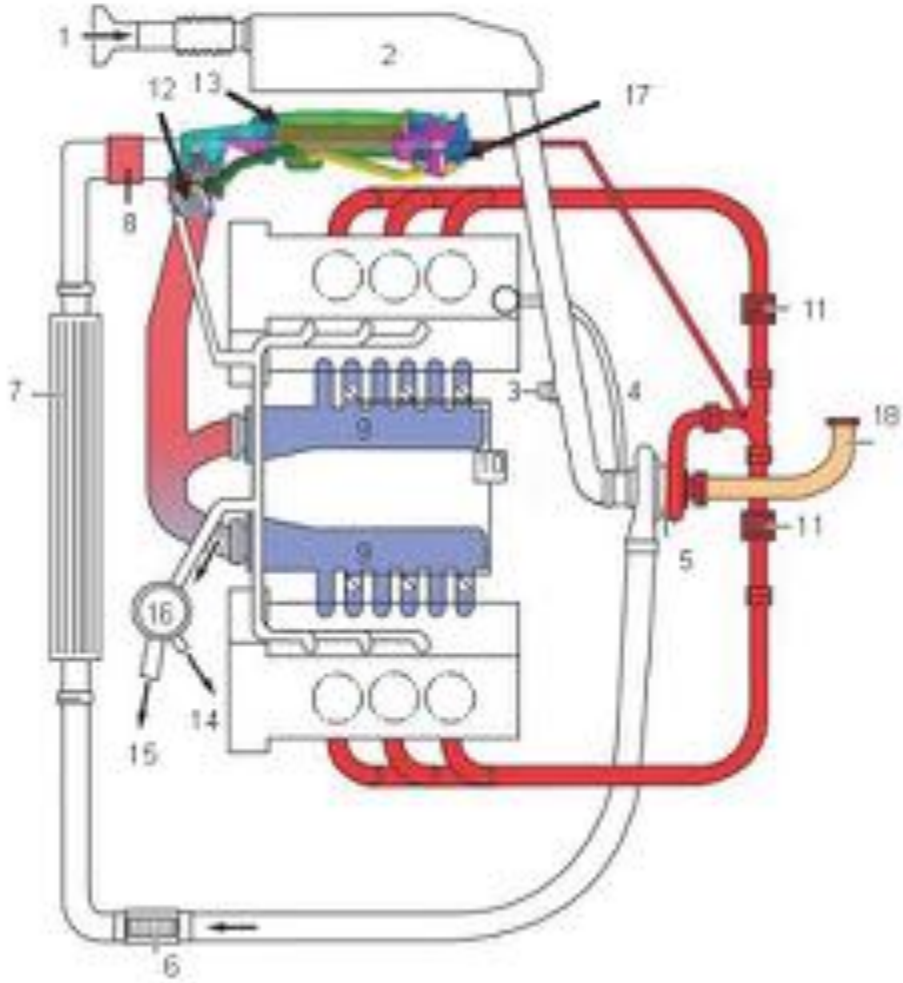

Pressure Sensor (B28/19)

Pressure sensor (B28/19) downstream of the air filter detects the absolute pressure in the intake duct and transmits the signal to the CDI control unit (N3/30) to:

- Protect turbocharger from over revving
- Monitor condition of air filter

B28/19 - Pressure sensor downstream of air filter

Hot Film Air Mass Sensor (B2/14)

Hot film MAF sensor

- MAF sensor monitors intake air volume
- Integrated temperature sensor monitors intake air temperature
- The signal from the MAF sensors are used by the CDI control unit for:
  - Inlet port shutoff
  - Exhaust gas recirculation
  - Fuel mixture

B2/14 – Hot film air mass sensor

Hot Film Air Mass Sensor (B2/14)

The Hot Film Air Mass sensor measures Oxygen and intake air temperature

This information is primarily used for:

- Intake port shutoff
- Exhaust gas recirculation
- Quantity mean value adaptation

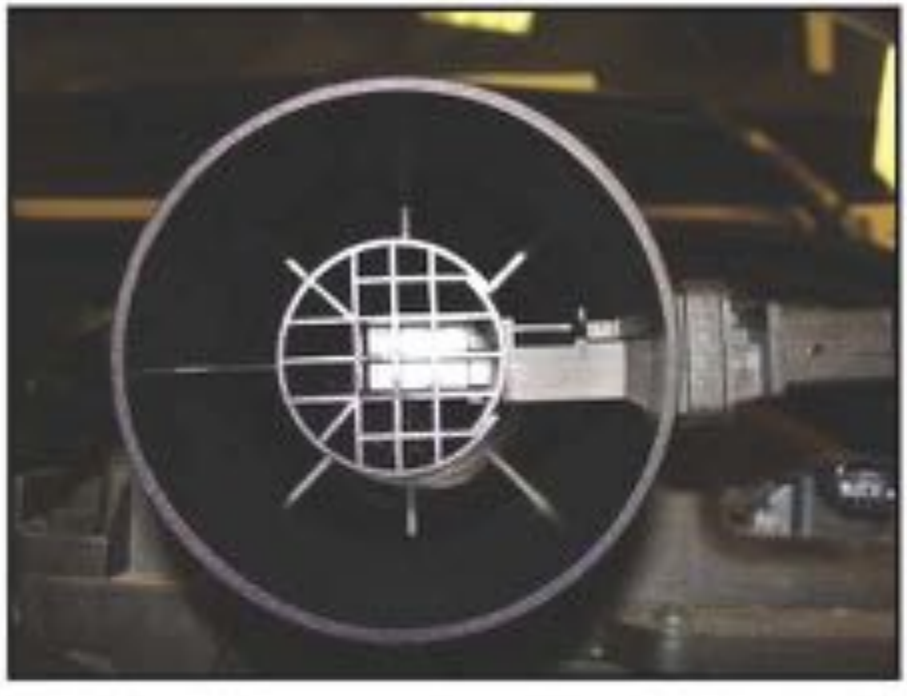

Turbocharger

VTG Turbocharger

A Compressor entrance
B Compressor exit
C Exhaust to turbine wheel
D Exhaust exit

a Turbine housing
b Turbine wheel
c Compressor housing
e Pilot stud, control rods
f Adjusting ring
g Pilot stud, guide vanes
h Guide vanes

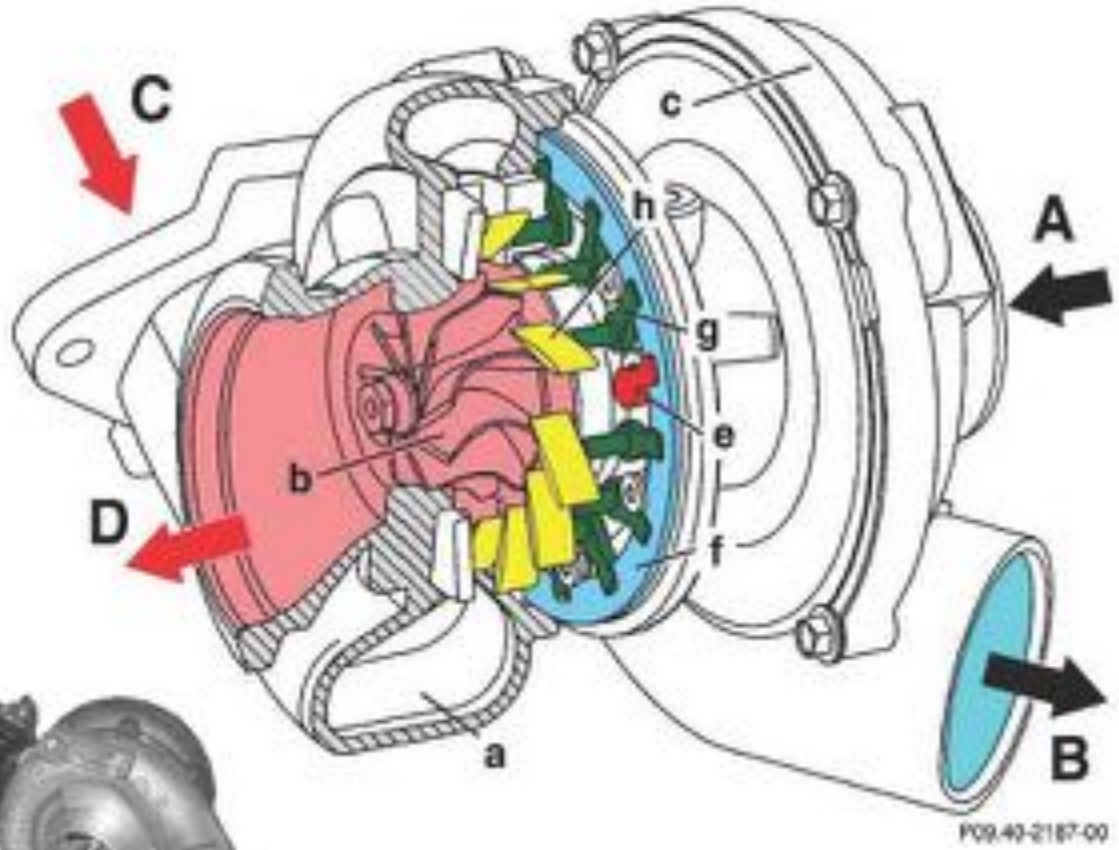

Boost pressure regulator (Y77/8)

VTG Turbocharger

Using the boost pressure, boost air temperature and load requirements, CDI control unit use the boost pressure regulator (Y77/8) to rotate the adjusting ring which alters the cross section of the guide vanes to control boost pressure

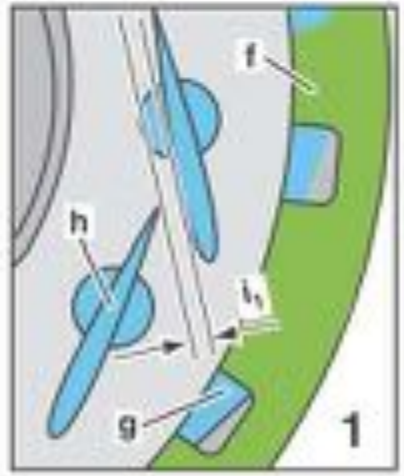

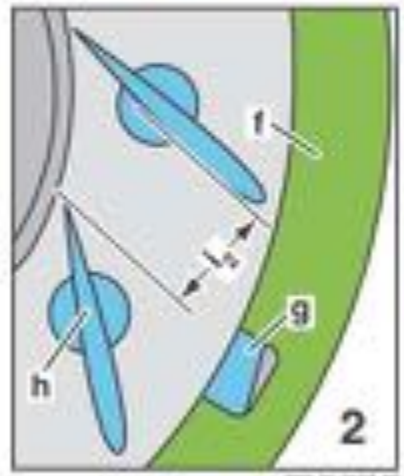

1 Guide vanes closed (High boost)
2 Guide vanes open (Low boost)
f Adjusting ring
g Guide vane pilot stud
h Guide vane
i_1 Flow cross section with closed vanes
i_2 Flow cross section with open vanes

Charge Air Distribution

The Charge air distribution manifold swirl ports are PWM controlled from the CDI control unit to improve premixing of the air and fuel

The ports are:

- spring loaded open
- closed at low rpm and load
- opened as load and rpm increase

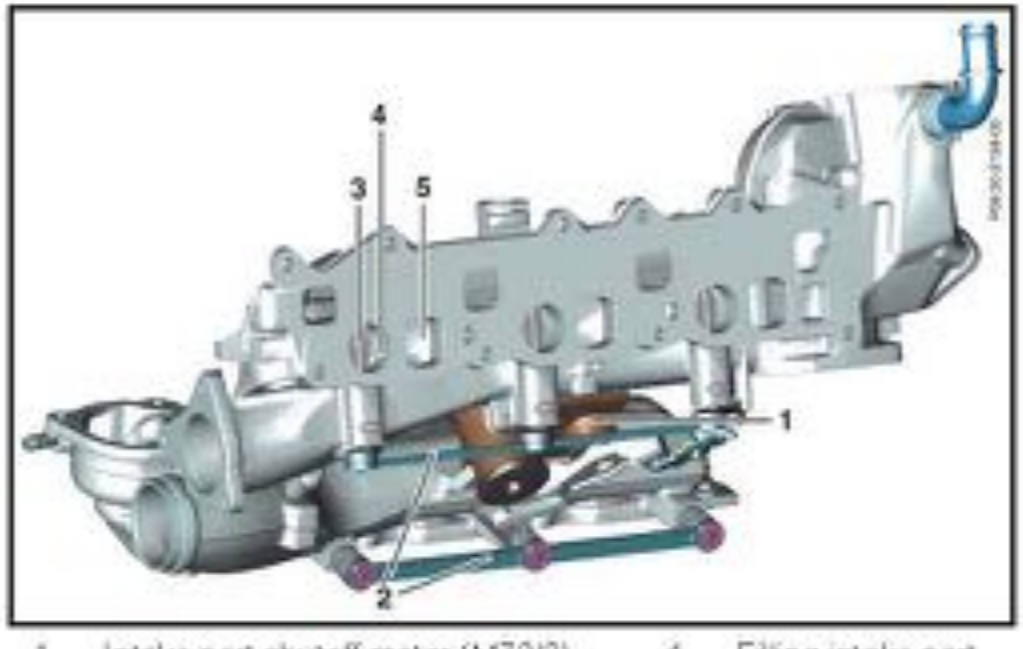

1 Intake port shutoff motor (M72/2)
2 Linkage
3 Flap
4 Filling intake port
5 Swirl intake port

Back Pressure Sensor (B60/4)

- The exhaust back pressure sensor (B60/4) determines the back pressure upstream of the turbocharger

The CDI (N3/30) control unit monitors the diesel particulate filter fill level for protection of the turbocharger and engine

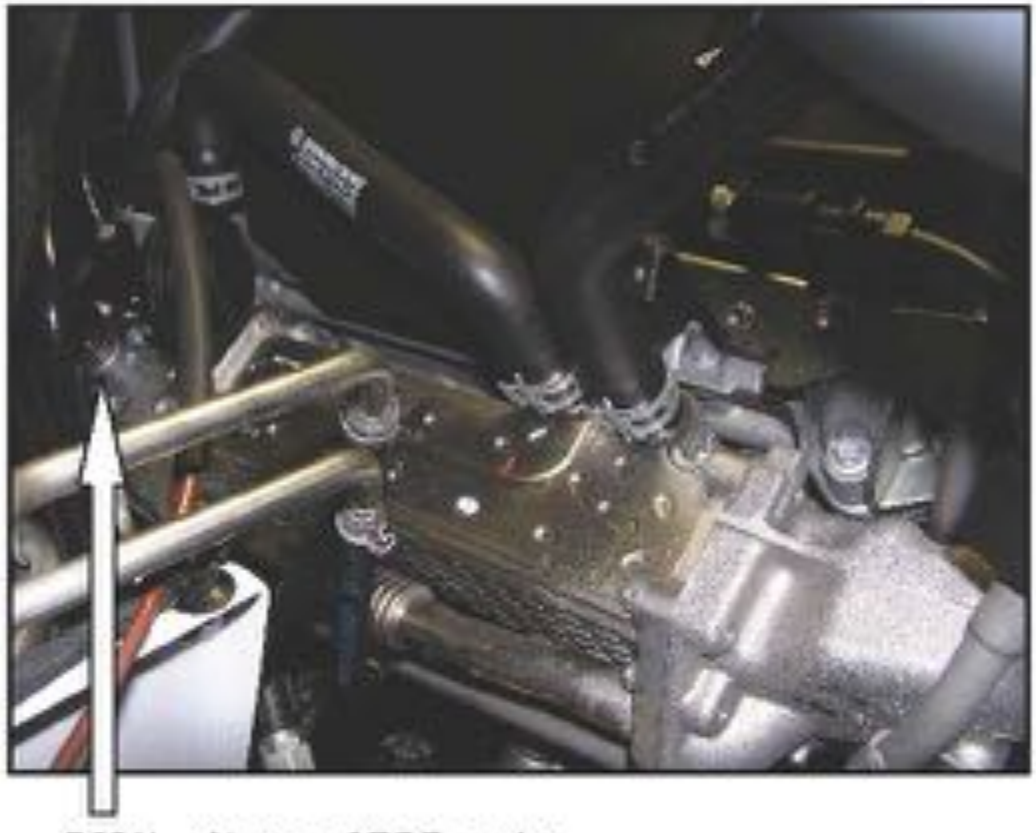

B60/4 – At rear of EGR cooler

Exhaust Gas Recirculation

- Exhaust gas volume is regulated by the CDI (N3/30) control unit via the EGR positioner (Y27/17)
- The EGR valve controls the flow of exhaust gas via the EGR water cooled heat exchanger intercooler to the charge air manifold

Intake air is mixed with the cooled exhaust gas to reduce NO_x values

EGR positioner (Y27/17)

Exhaust Gas Recirculation Cooler

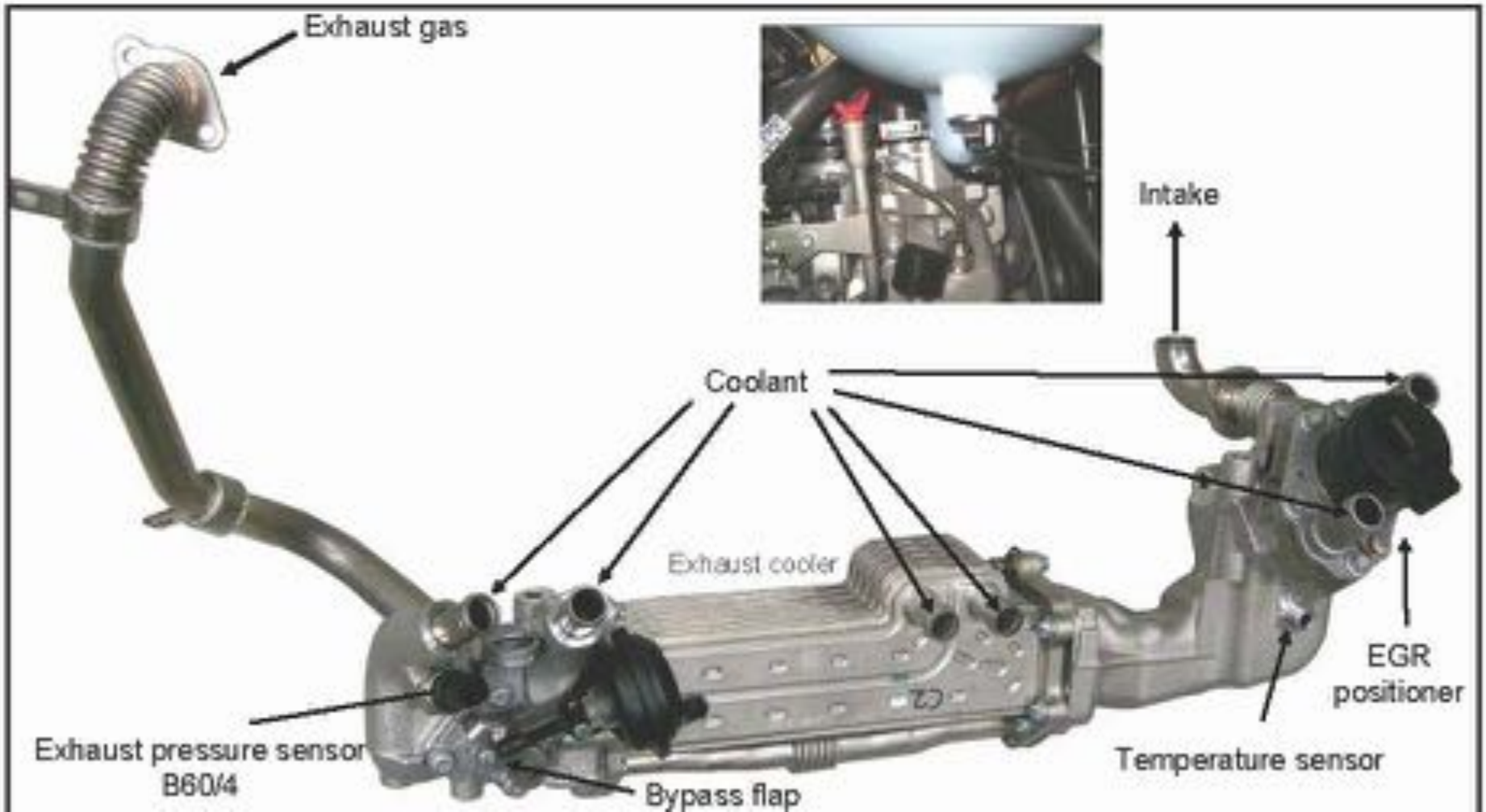

Exhaust Gas Recirculation Cooler

The CDI control unit (N3/30) monitors the EGR cooler temperature sensor (B19/21) and regulates a pneumatic bypass flap via a solenoid valve (Y27/13)

Y27/13 behind right headlamp

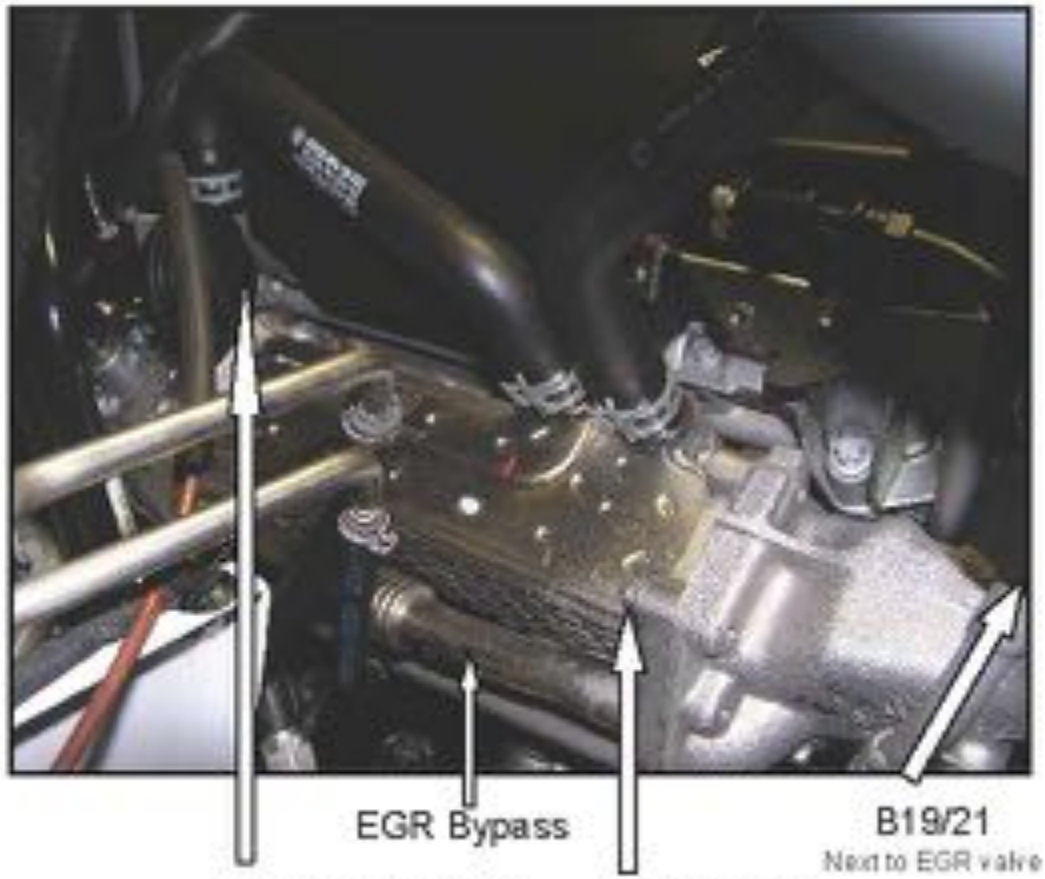

Throttle Valve Actuator (M16/48)

- The CDI control unit uses a PWM signal to regulate the throttle valve
- By throttling the intake air, the exhaust gas recirculation rate can be increased to reduce NO_x

During the DPF burn cycle, the flap is actuated to increase combustion temperature

Throttle Valve Actuator (M16/48)

Exhaust Aftertreatment

2010 Sprinters will meet 50 state emission guidelines with the help of a SCR (Selective Catalytic Reduction) system that includes:

- DEF (Diesel Exhaust Fluid)
- SCR catalyst
- Electronic controllers
- Sensors
- Heating elements
- Dosing valve
- DEF tank

This system reduces NOx (Nitrogen Oxide) emissions by over 80%

Exhaust Aftertreatment

The engine controls have minimized:

- CO
- HC
- NOx levels

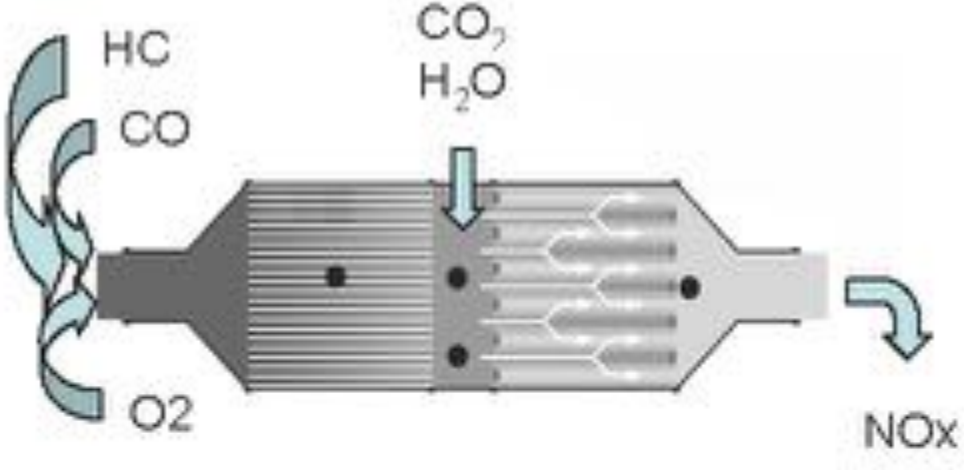

However, they still need to be reduced -

Exhaust Description

First exhaust component is the Oxidation Catalytic Converter which converts carbon monoxide and hydrocarbons to carbon dioxide and water

The Diesel Particulate Filter (DPF) in the same housing traps soot particles and are burned off using additional fuel injections

This action creates NO (Nitric Oxide) which combines with O2 to create NO2 (nitrogen dioxide)

The NOx will be reduced in the SCR catalyst

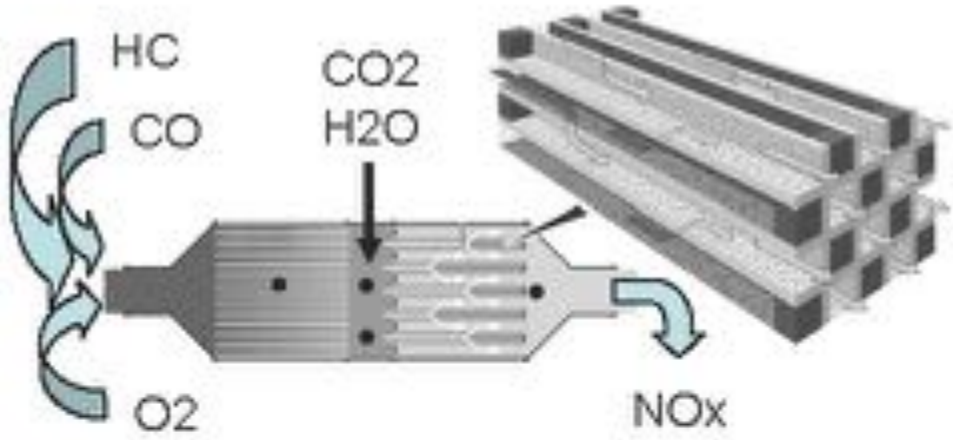

DEF (Diesel Exhaust Fluid)

DEF (Diesel Exhaust Fluid) is a mixture of ~33% Urea and ~67% water

DEF has a shelf life that is influenced by ambient temperature and humidity

Storage tank located on right side of vehicle, behind the B-pillar

DEF

DEF crystallizes, as seen in the upper picture and is also corrosive

Care must be taken when handling, if spilled near electrical connections it could cause electrical issues

Clean up with plenty of warm water if spilled

DEF freezes (as seen in the lower picture) at 12° F

All components that come into contact with DEF are heated

DEF Safety Notes

SAFETY NOTE:

- Wash hands and any body parts that come into contact with DEF
- Flush eyes immediately if they come in contact with DEF and seek immediate medical attention.
- Drink plenty of water if DEF is swallowed and seek immediate medical attention

DEF Consumption

Extreme driving conditions can lead to higher DEF consumption:

- Engine operating conditions with high EGR rate
- Engine operating conditions with small injecting rate
- Cold outside temperatures
- Driving profile with low speed (city-drive)

DEF Tank

The DEF tank on cargo and passenger vans consists of:

- 5.07gal. (19.2L)
- SCR pump
- Temperature sensor
- Heating elements
- Level sensors
- Drain valve

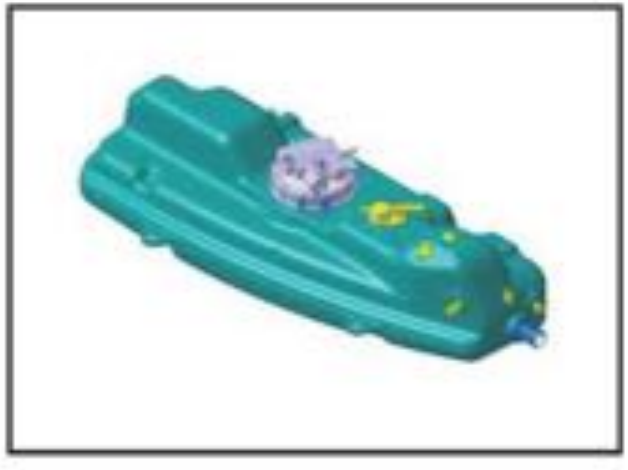

The chassis cab version differs:

- 5.86gal. (22.2L) tank
- SCR pump
- Temperature sensor
- Heating elements
- Level sensors
- No drain valve

DEF Tank Filling

The DEF tank on cargo and passenger vehicles is filled from under the hood near coolant reservoir

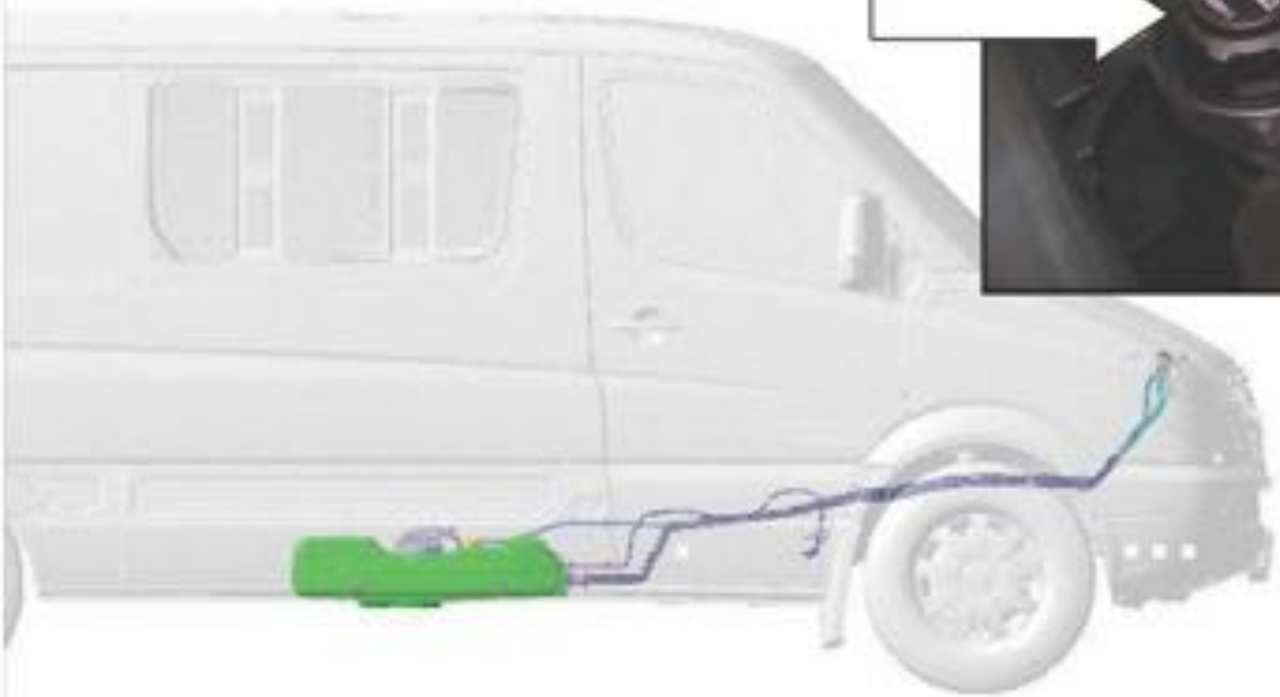

DEF Tank Filling

The DEF tank on Chassis-Cab is filled on the right side of the vehicle
Special tool to open the cap is located in the jack area of the cab

SCR Control Unit (N141)

The SCR Control Unit (N141) communicates with:

- The Pump Module
  - temperatures & pressure
- CDI control unit (N3/30) via the SCR CAN.

SCR outputs:

- Dosing valve (Y130) – PWM signal
  - Amount determined by CDI
- DEF system heating elements
- Reversing valve
- DEF pump

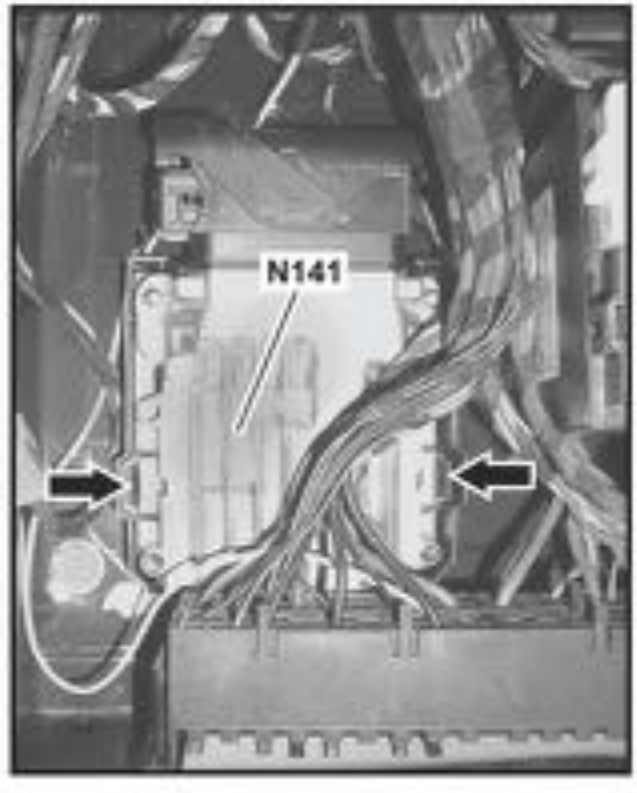

Located under the drive's seat

Dosing Valve (Y130)

The dosing valve is responsible for injecting the DEF into the exhaust prior to the SCR Catalytic converter

- Up to 5 bar pressure supplied via the DEF pump
- SCR control unit activates dosing valve via a PWM signal
- Valve is also opened when engine is shut down to purge the valve and pressure line of DEF
- PWM controlled from SCR control module N141

Y130 – DEF Dosing Valve

DEF Pump Module (A103)

The Pump Module is controlled by the SCR Control Unit (N141) and consist of:

- DEF pump (M89) (Capable of 5 bar pressure)
- Tank level sensor (B152)
- Pressure sensor (B151)
- Temperature sensor
- Heating elements (R51)
- Reversing valve (Y129)
- Filter

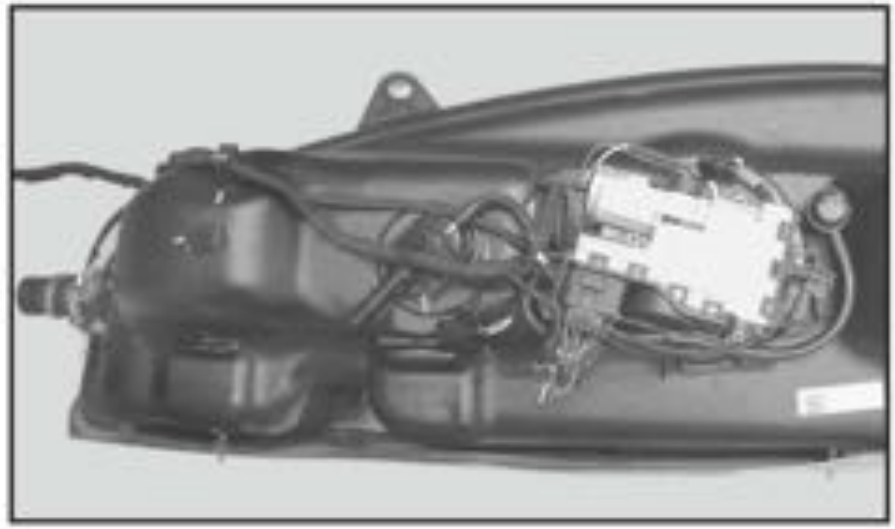

The Pump Module is located on the tank above the heating pot

DEF Tank Heating Pot

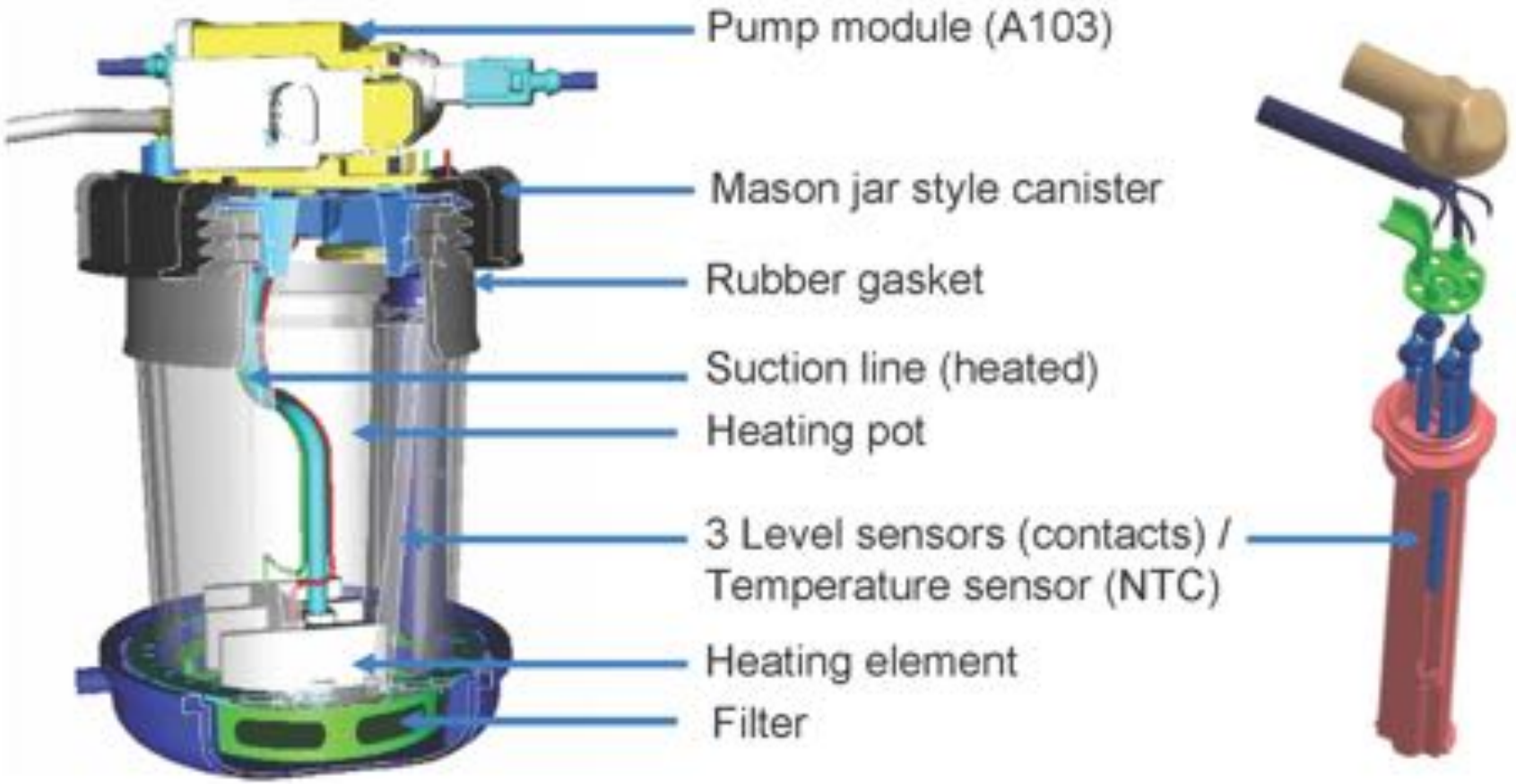

There are no moving parts inside the DEF tank

DEF Level Warnings

DEF Warnings – Lowline Cluster

When DEF level is in the Warning level range	Limited Starts remaining	No starts remaining	Failure of NOx-Sensor system	Wrong reducing agent
gong	triple buzzer	triple buzzer		gong

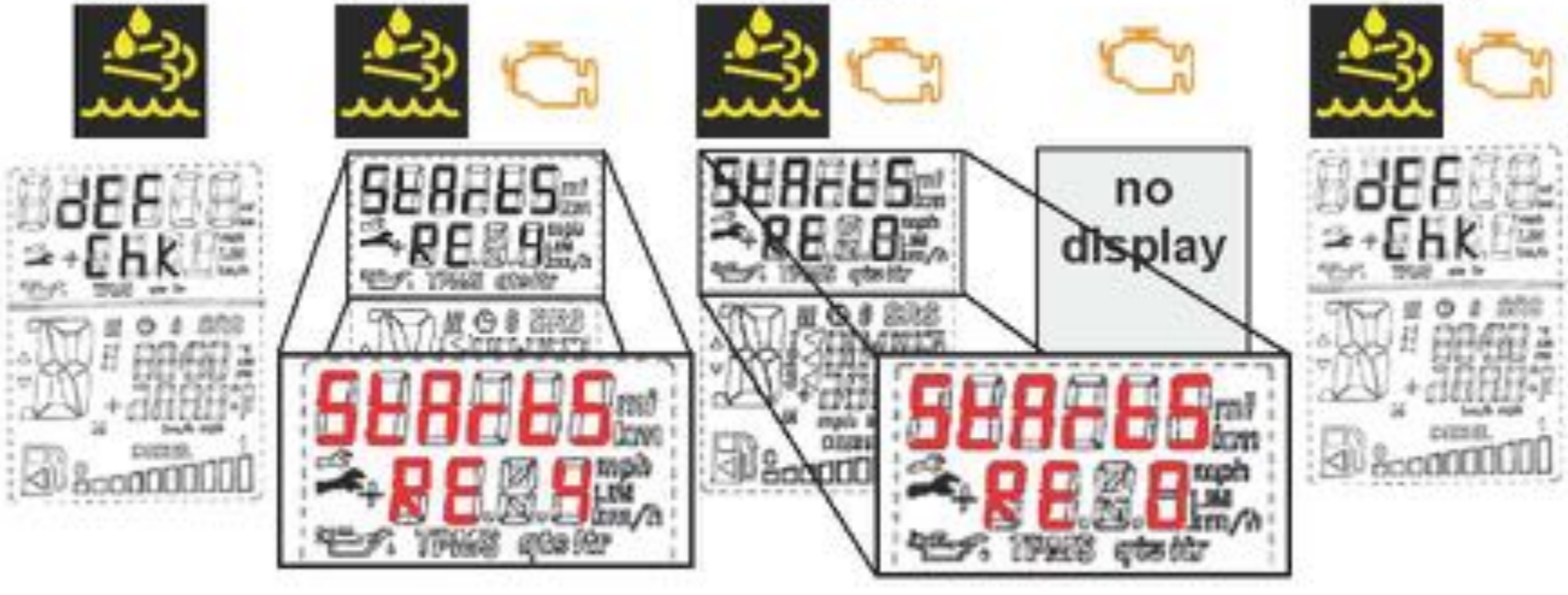

DEF Warnings – Highline Cluster

When DEF level is in the Warning level range	Limited Starts remaining	No starts remaining	Failure of NOx-Sensor system	Wrong reducing agent
gong	triple buzzer	triple buzzer	none	gong

Exhaust Concept

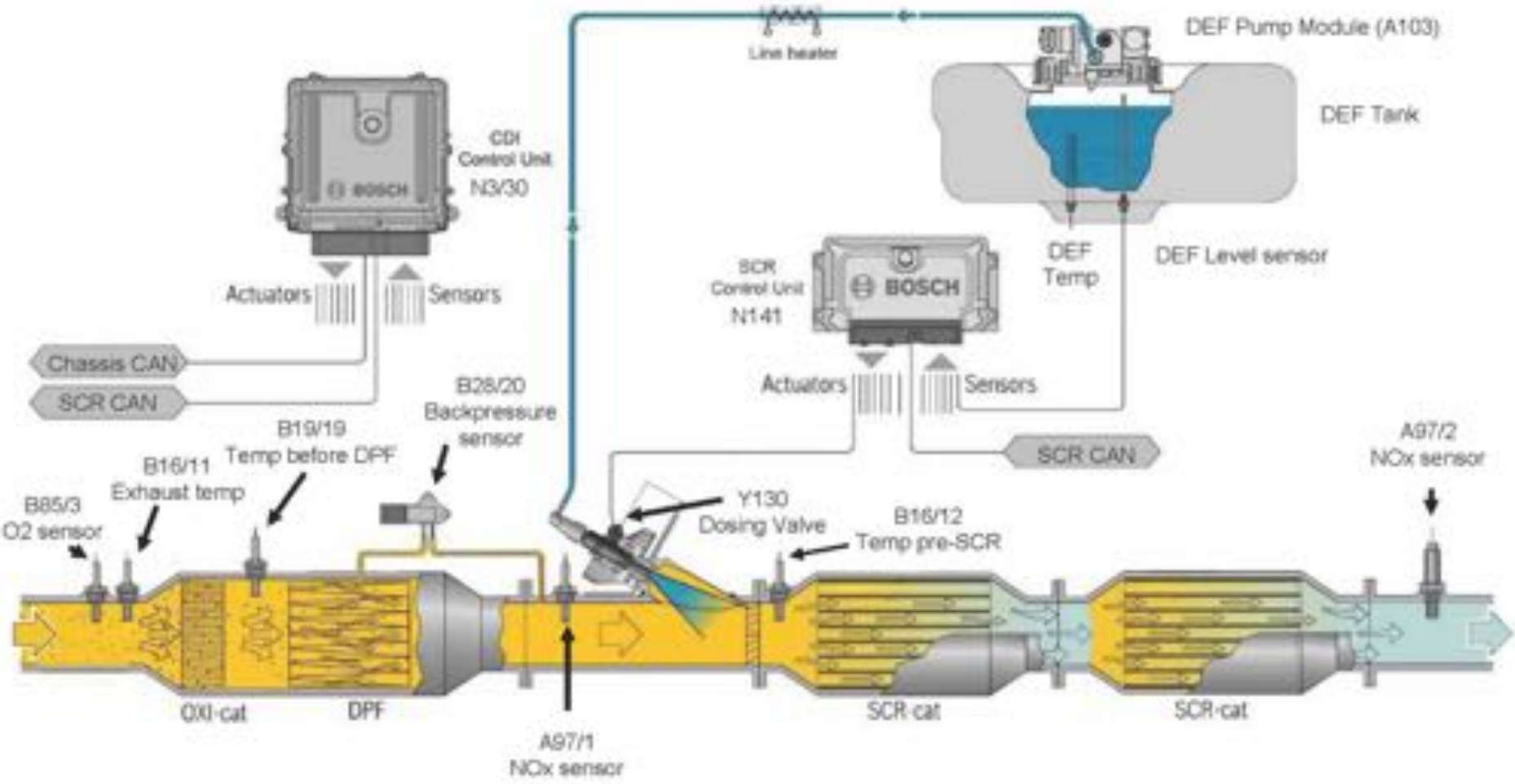

Operational Overview

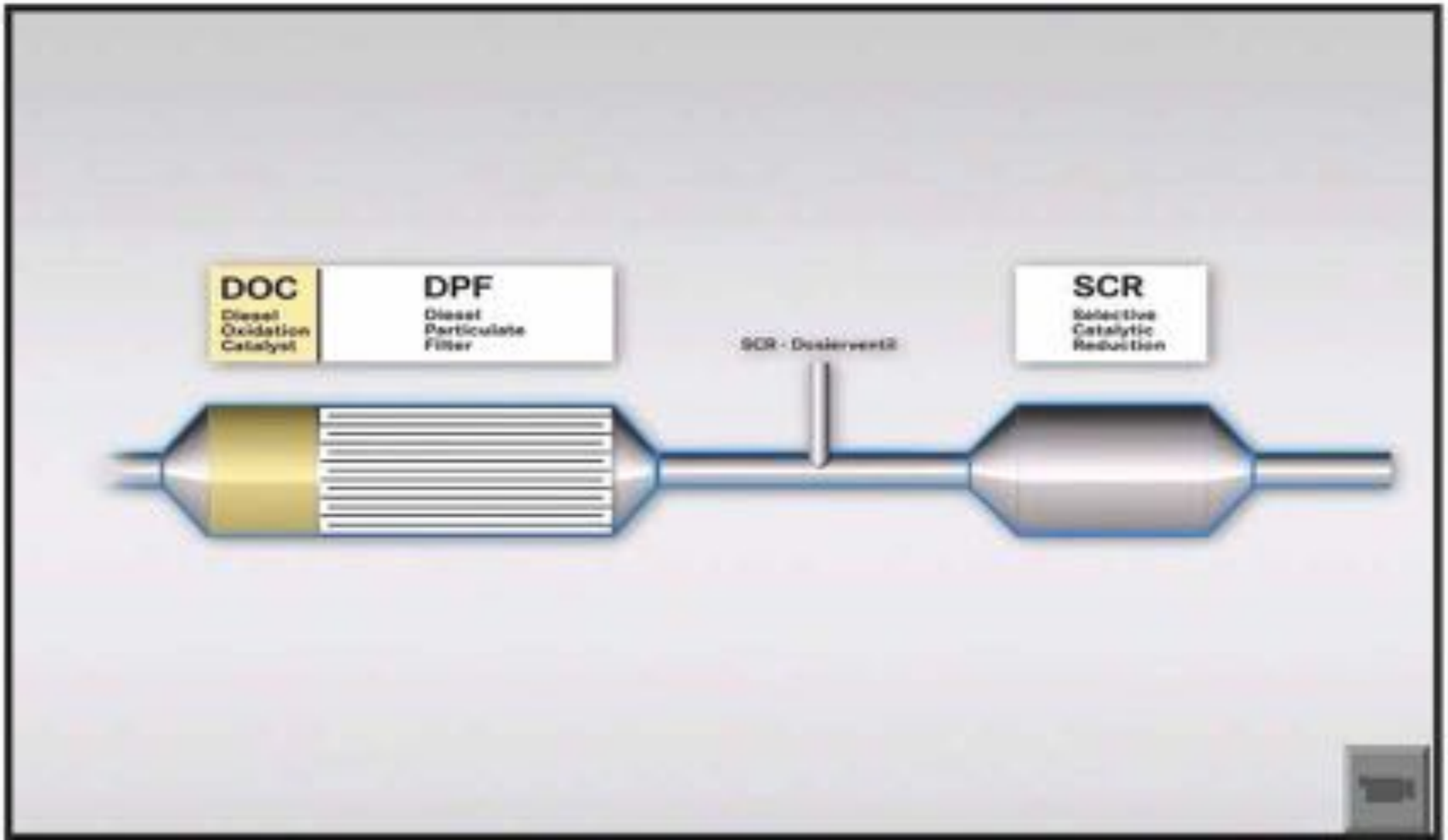

NOx Sensors (A97/1 & 2)

- NOx sensor assemblies are installed under the vehicle
- One is located before the SCR Catalytic Converters and the other one after (Each unit has a different part number)
- NOx sensors measure:
  - NOx in the exhaust gas
  - Oxygen (O2) concentration
- The information is sent over the SCR CAN

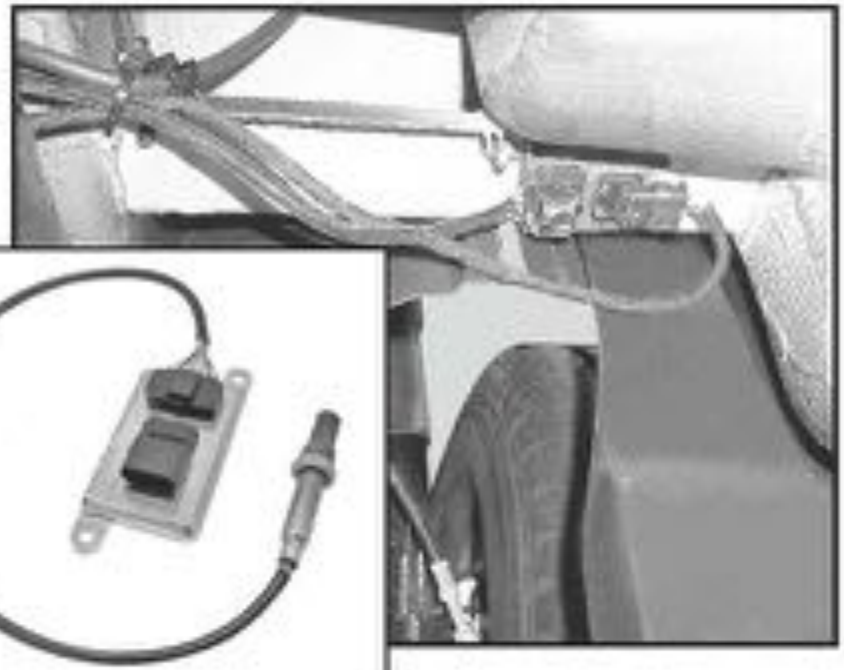

- The CDI (N3/30)control unit uses this information to determine the amount of DEF required

Exhaust Components

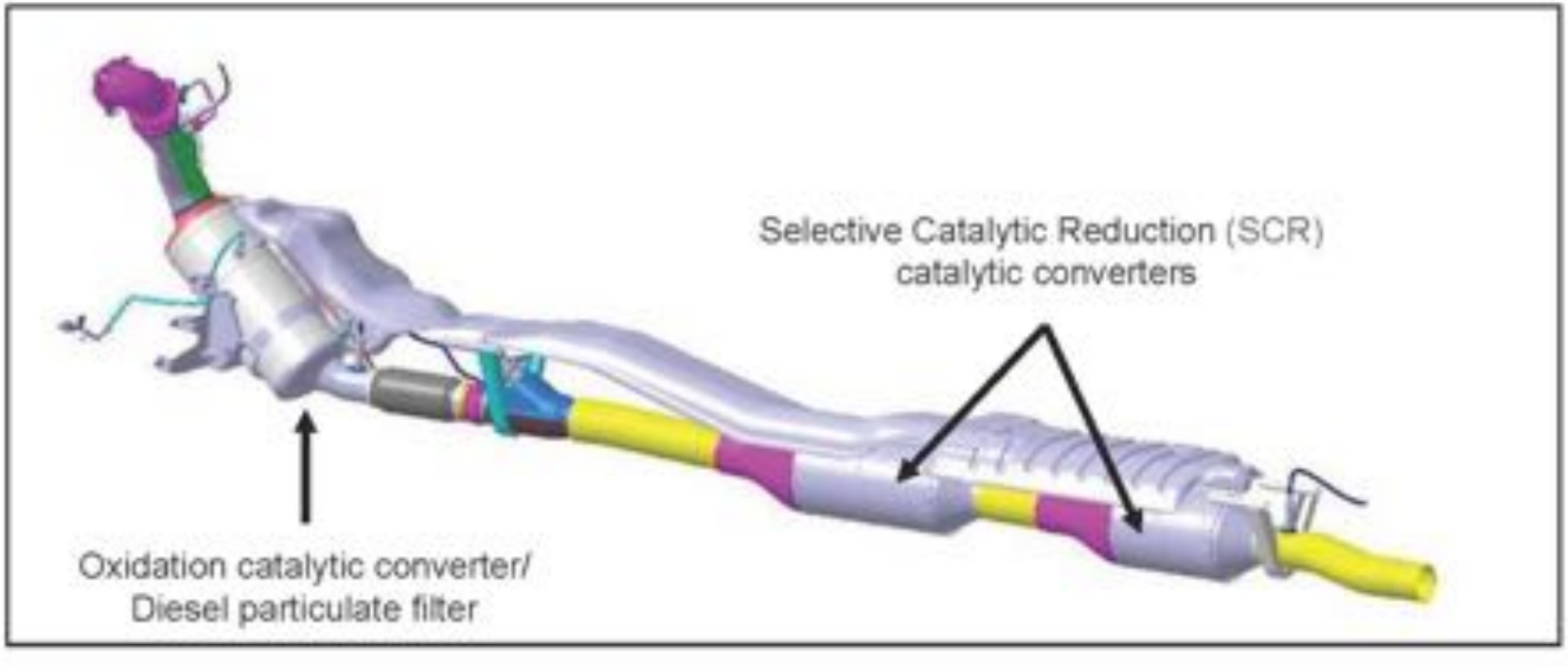

Exhaust Details

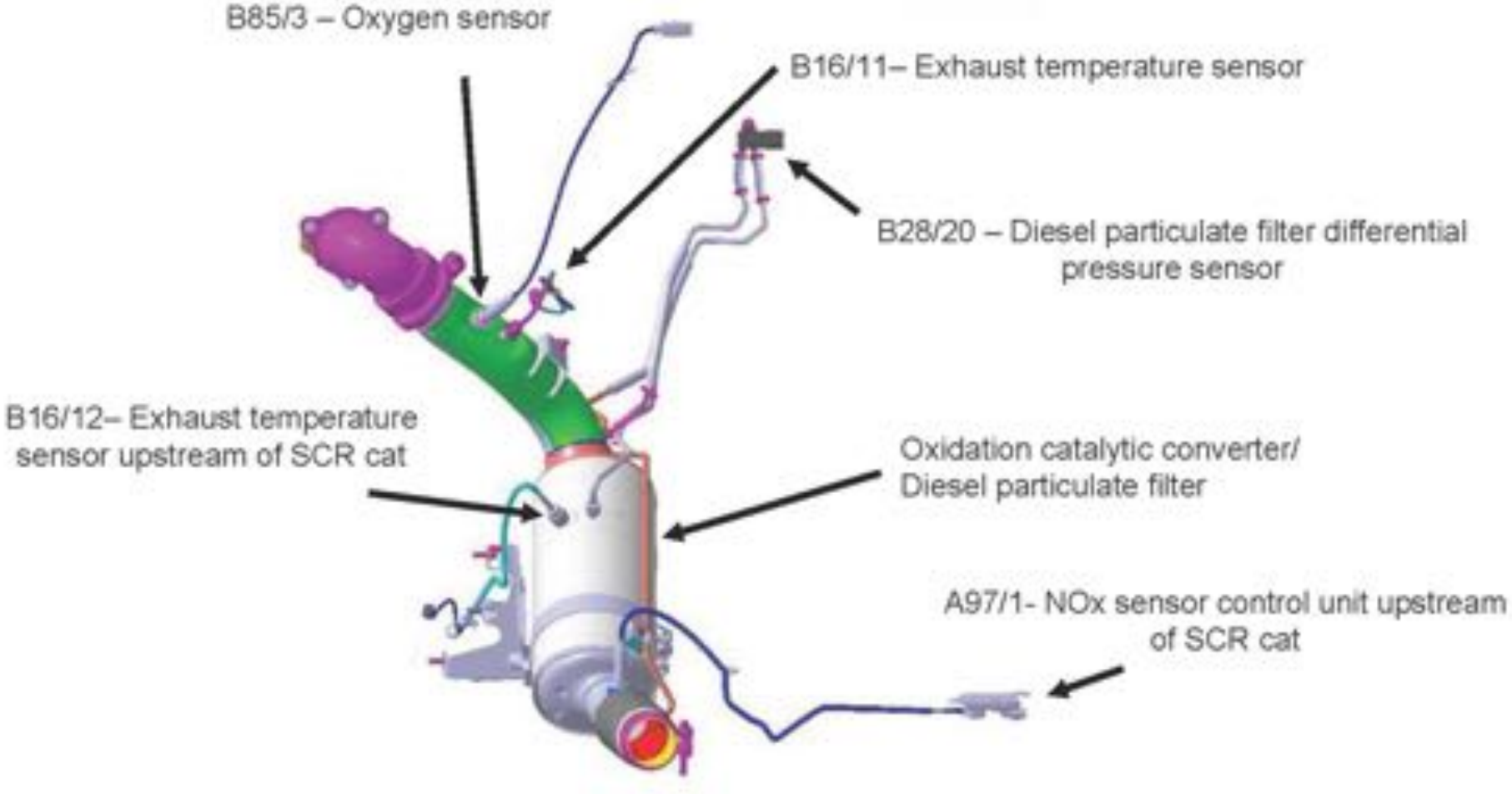

Exhaust Details

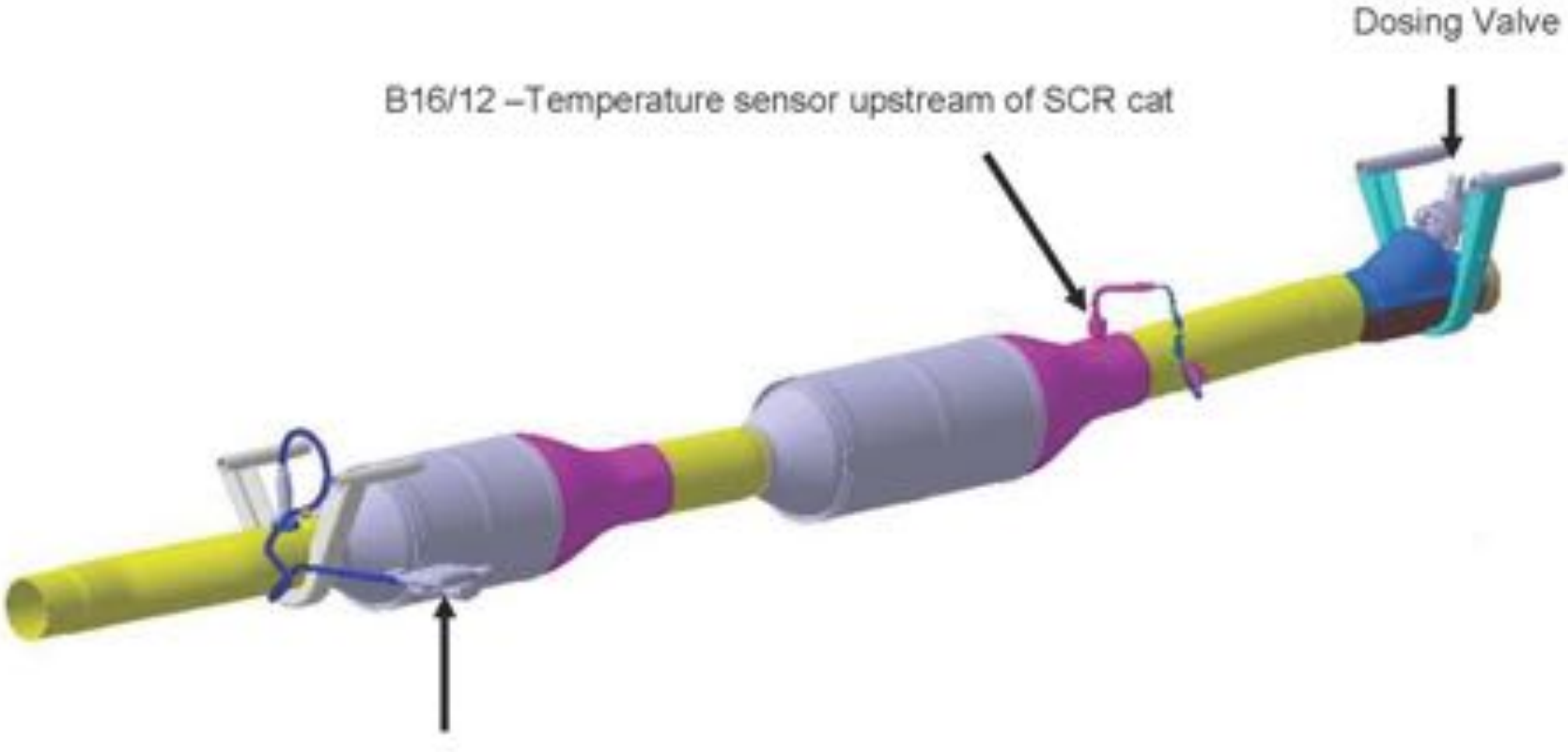

On Board Diagnosis

The following systems and functions are monitored:

- Exhaust gas recirculation
- Smooth running
- Fuel system
- Glow system
- Intake and charge air system

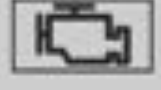

Engine diagnostic indicator lamp

Exhaust gas aftertreatment malfunction

Freeze frame data stored with fault

- Vehicle speed
- Engine RPM
- Coolant Temperature
- Boost pressure
- Engine load

Note: Freeze frame data is not deleted when the battery (G1) is disconnected

On Board Diagnosis Terminology

Readiness code – used to recognize that test procedures have been processed for fault detection.

Readiness code is set when two driving cycles, including the cold start have run without fault.

Driving cycle consist of
- Engine start
- 35 sec idling
- Engine stop
- Processor run-on of at least 10 seconds (Wait for cooling fan run-on)

Engine diagnostic indicator lamp

Exhaust gas aftertreatment malfunction

Warm-up cycle some systems are only checked after a warm-up cycle has been run.
A warm-up cycle consists of:
- Engine start
- Temperature increase > 4.5 C
- Final temperature > 60 C
- Engine stop
- Run-on of at least 10 s (wait for cooling fan run-on)

Service Refill / Workshop Equipment

Suction pump for DEF

- This pump is used to empty the tank, which is necessary to remove old DEF, as it has a life span of approximately two years

BlueTEC testing and measurement kit

- Test kit for measurement and quantification of the urea content in DEF, kit contains;
  - Refractometer for measuring DEF Quality
  - Measuring cylinders for measuring DEF output
  - Hoses for testing connection

Special Notes / Diagnosis

- High pressure fuel system performs "logic" test for system pressure, and there is currently no mechanical test for high pressure system.
- Faults for insufficient high pressure may occur due to loss of low pressure system function.
- Because of high pressure pump limitations on testing, proper low pressure system testing must be performed prior to testing high pressure system.
- Read through SDS test instructions before performing test to ensure directions follow logical order.
- CDI control module may install substitute values for failed sensors.

Special Notes / Diagnosis

Proper low side pressure is essential in order for the high side to function properly.

Special Notes / Diagnosis

Checking the low side fuel pressure circuit <u>after</u> the fuel filter

- Remove fuel hose after fuel filter.
- Connect fuel pressure gauge
- Start engine
- Fuel pressure should be 3.8 to 4.5 bar.

Special Notes / Diagnosis

Checking low fuel pressure circuit
before fuel filter

- Remove fuel hose before fuel filter.
- Connect fuel pressure gauge
- Start engine
- Fuel pressure should be 3.8 to 4.5 bar.

Note: If the fuel pressure is higher than the previous test, the fuel filter is restricted.

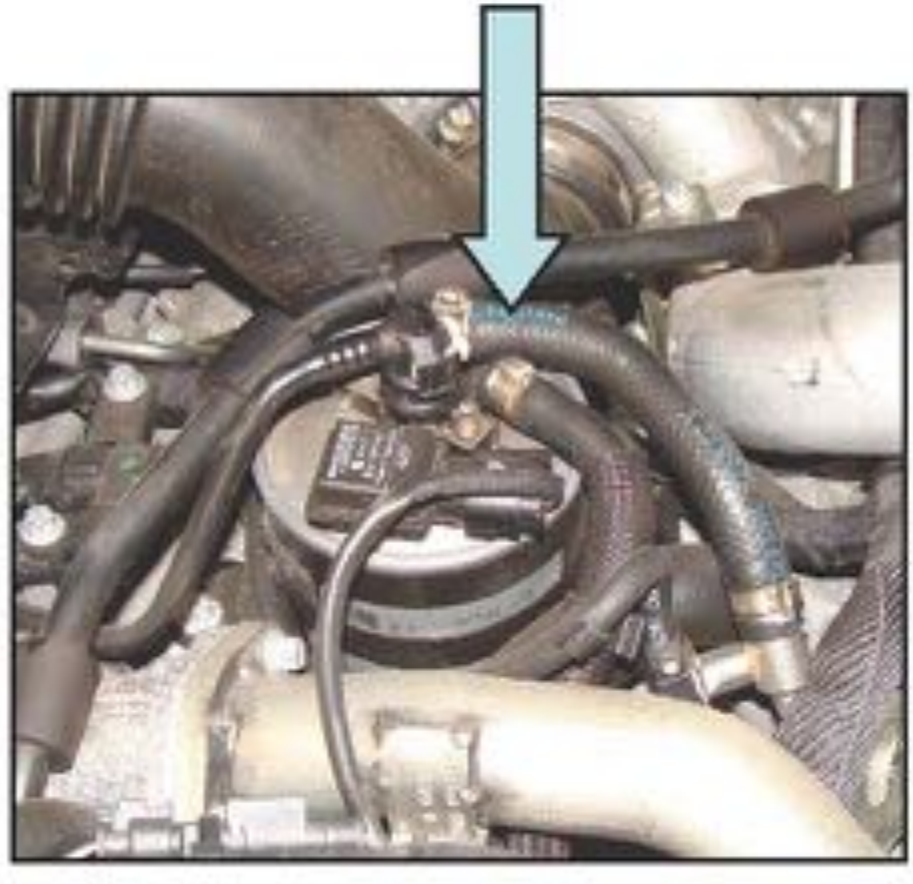

Special Notes / Diagnosis

Perform low pressure system supply volume test at High Pressure Pump inlet or fuel filter exit connections.

Test is performed using SDS under lists of guided test or as part of testing for specific fault code.

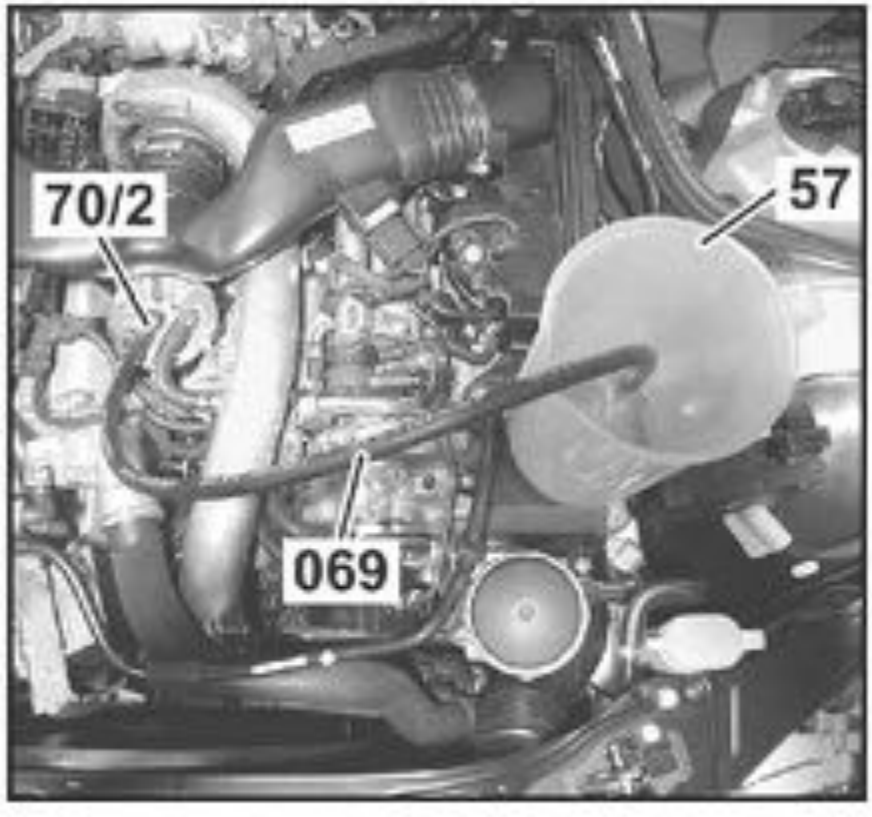

Special Notes / Diagnosis

Low Pressure Circuit Test Values

- Normal fuel pressure;
  Before filter 3.8 to 4.5 Bar
  After filter 3.8 to 4.5 Bar

- Rest pressure falls to 0 Bar 3-5 seconds after ignition off

- Normal fuel volume as tested at high pressure inlet;
  More than 0.5 liters in 9 seconds

- Normal electric fuel pump current as tested at fuse;
  4 to 9 amps during pump cycle

Special Notes / Diagnosis

High pressure system testing notes

- Inadequate high system pressure can occur due to mechanical or electrical failures of :
  Y74/6 (Rail Pressure Control Valve)
  Y94/4 (Quantity Control Valve)

- After low pressure system test ensures correct delivery of fuel to high pressure pump, SDS guided test can be performed to validate high pressure control function.

- There is no mechanical test for the high side pressure

- Piezo injectors use high voltage and should not be disconnected with engine running.

Acronym List

CAN - Control Area Network
CDI – Common rail Direct Injection
CO – Carbon Monoxide
DAS – Diagnostic Assistance System
DEF – Diesel Exhaust Fluid (AdBlue)
DOC – Diesel Oxidation Catalyst
DPF – Diesel Particulate Filter
ECU – Electronic Control Module
EKAS - Electrically controlled intake port shutoff
EGR – Exhaust Gas Recirculation
FSCM – Fuel System Control Module
FSCU – Fuel System Control Unit
HC – Hydrocarbon
ISA – Injector compensation
IMA – Injector compensation
ISS – Instant Start glow plug System
LIN – Local Interconnect Network
MAF – Mass Air Flow sensor
MAP – Manifold Absolute pressure
NO2 – Nitrogen Dioxide
NOx – Nitrogen Oxide
NTC – Negative Temperature Coefficient
O2 – Oxygen
OBD – On Board Diagnosis
OM – Oil Motor (OM642)
PWM – Pulse Width Modulation
SCR – Selective Catalytic Reduction
SDS – Star Diagnostic System
VTG - Variable Turbocharger Geometry

Transmission

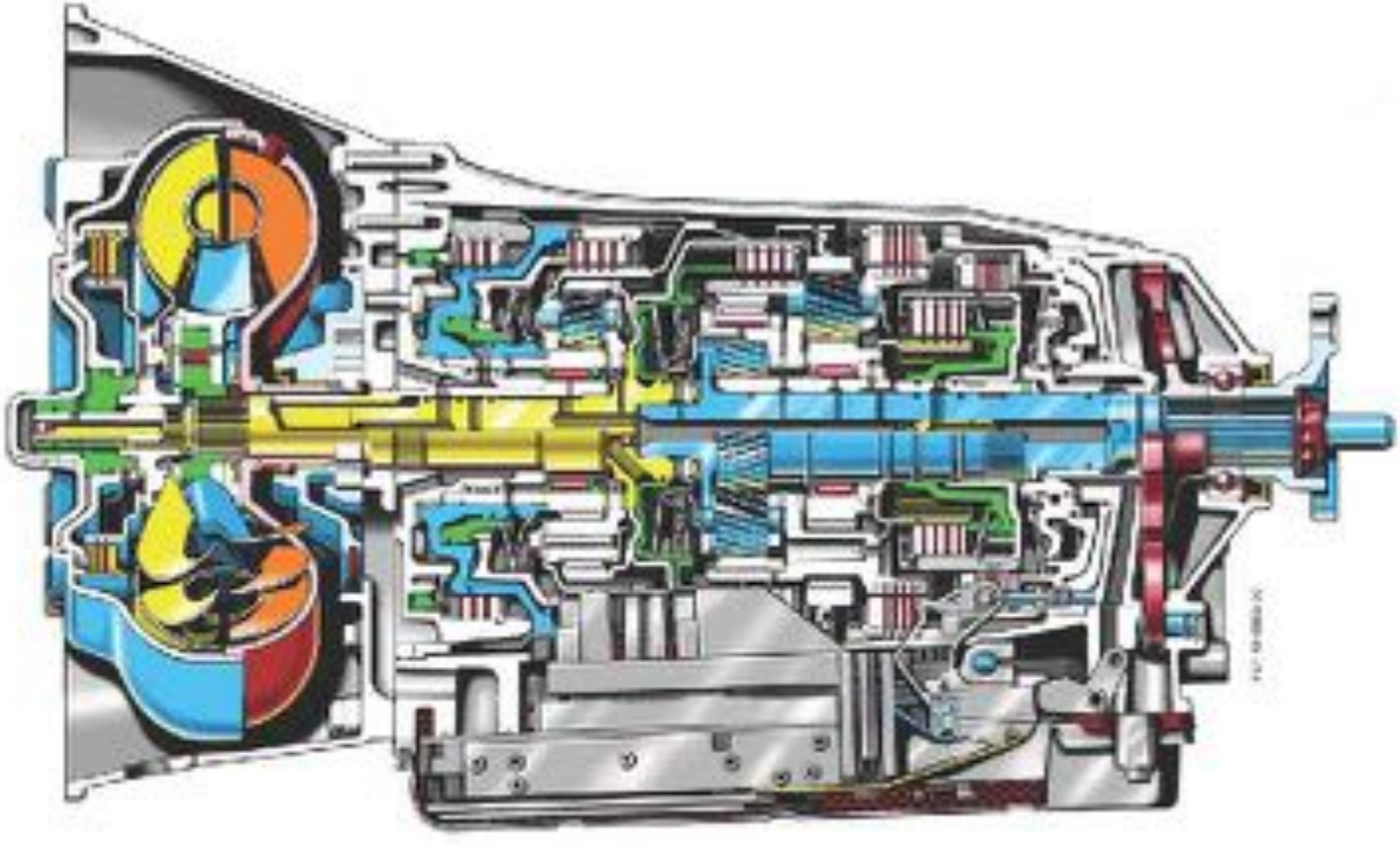

Transmission Designations

722 . 6 83

- 83 — Version
- 6 — Sales designation
- 722 — Automatic transmission passenger car

W 5 A 380

- 380 — Maximum input torque in NM
- A — Version (internal)
- 5 — Number of forward gears
- W — Torque converter

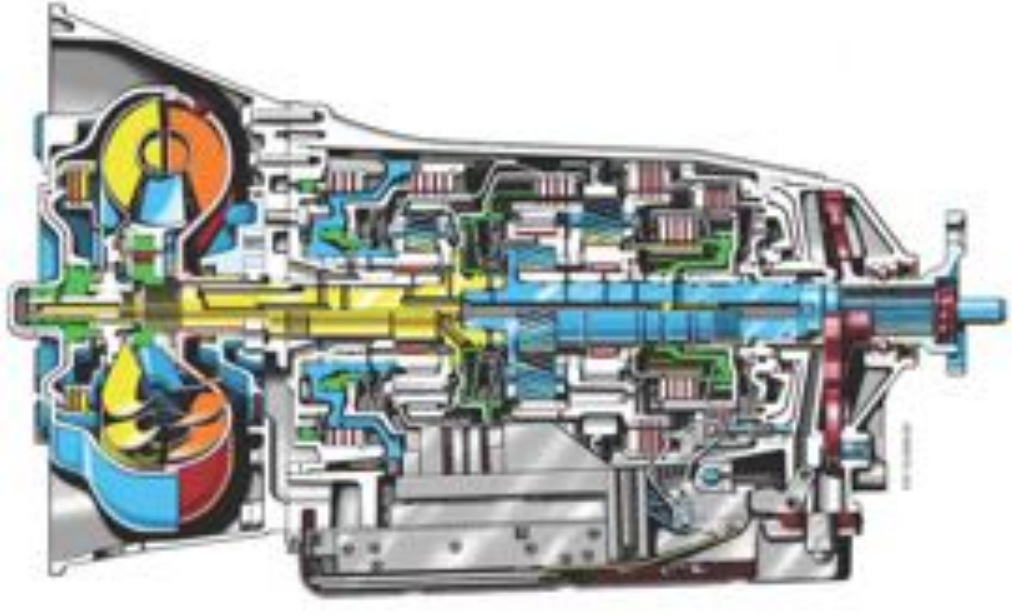

Components and Subsystems

Mechanical transmission components and torque converter

1 – Torque converter
2 – Oil pump
3 – Input shaft
4 – Mulitdisk B1
5 – Mulitdisk K1
6 – Multidisk K2
7 – Multidisk B3
8 – Multidisk K3
9 – Multidisk B2
10 – Output shaft
11 – Park Pawl gear
12 – Intermediate shaft
13 – F2 freewheel
14 – Rear planetary gearset
15 – Middle planetary gearset
16 – Electrohydraulic control unit
17 – Front planetary gearset
18 – F1 freewheel
19 – Input shaft
20 – Torque converter lockup clutch

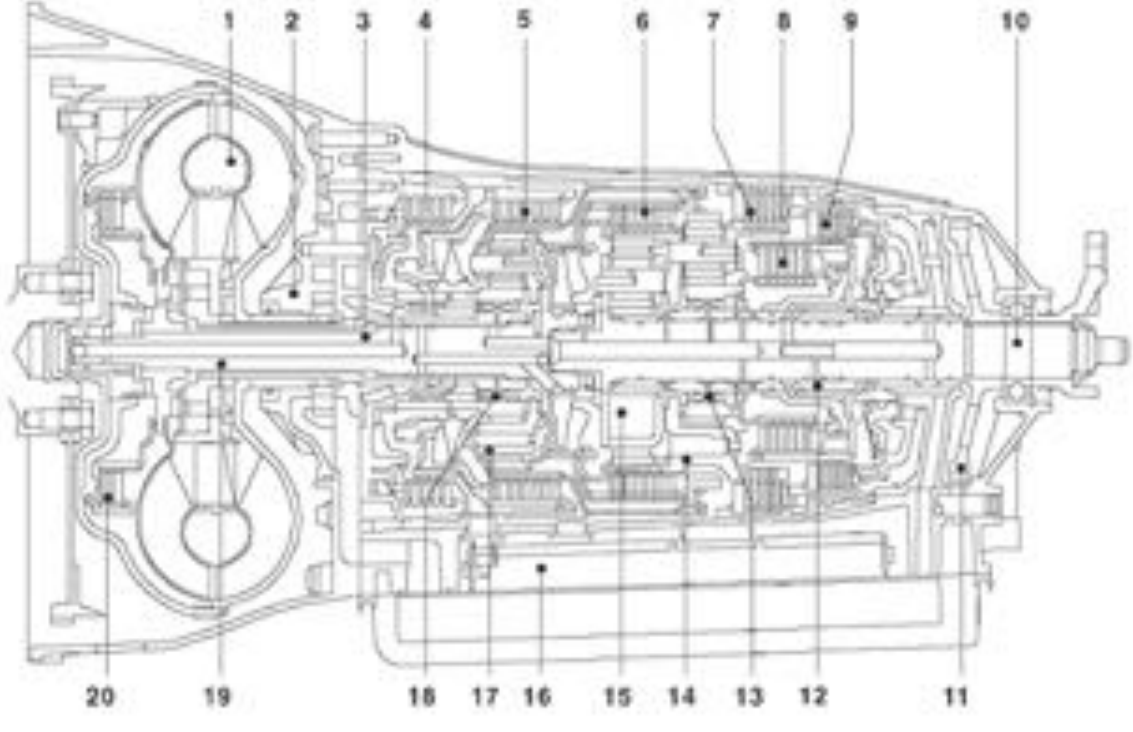

Torque Converter

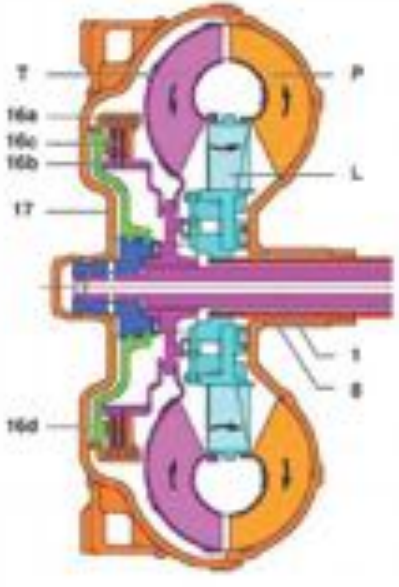

- The torque converter is equipped with a torque converter lockup clutch, which is implemented as a multi-disk clutch.
- The torque converter has its own oil drain plug because, when the transmission oil is changed, the oil of the torque converter also has to be changed.

Torque Converter Lockup Clutch

The slip occurring in the torque converter and causing a difference between the engine speed and the transmission input speed is reduced with the help of the torque converter lockup clutch.

This lowers the engine speed and improves the transmission efficiency.

The cut-in of the torque converter lockup clutch takes place depending on the transmission input and output speed as well as the accelerator pedal position in all gears. It is operated map-controlled.

The torque converter lockup clutch operates with a slip of approx. 3 % when "closed".

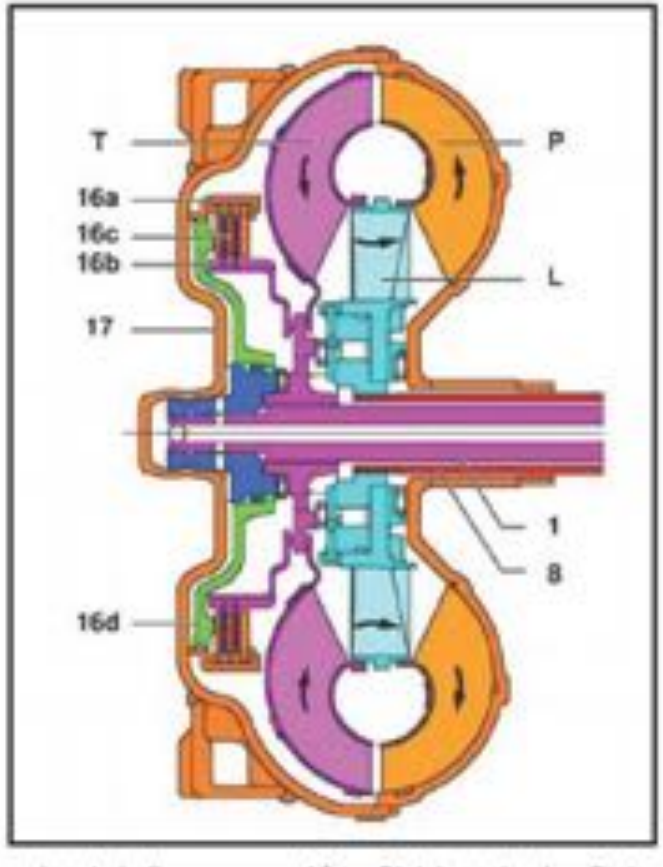

1 - Input shaft
8 - Stator shaft
16a - External plate carrier
16b – Internal plate carrier
16c – Clutch pack
16d – Piston
17 - Cover shell
L – Stator
P – Impeller
T – Turbine wheel

Checking Oil Level

The oil dipstick is a special tool.

Check the transmission oil level at a transmission oil temperature of > 80 ° C to assure the oil level measurement is correct.

The oil level at the dipstick must be read at the marking "B".

The cap on the oil fill tube is secured with a tamper-proof seal.

Install a new tamper-proof seal after checking transmission fluid level.

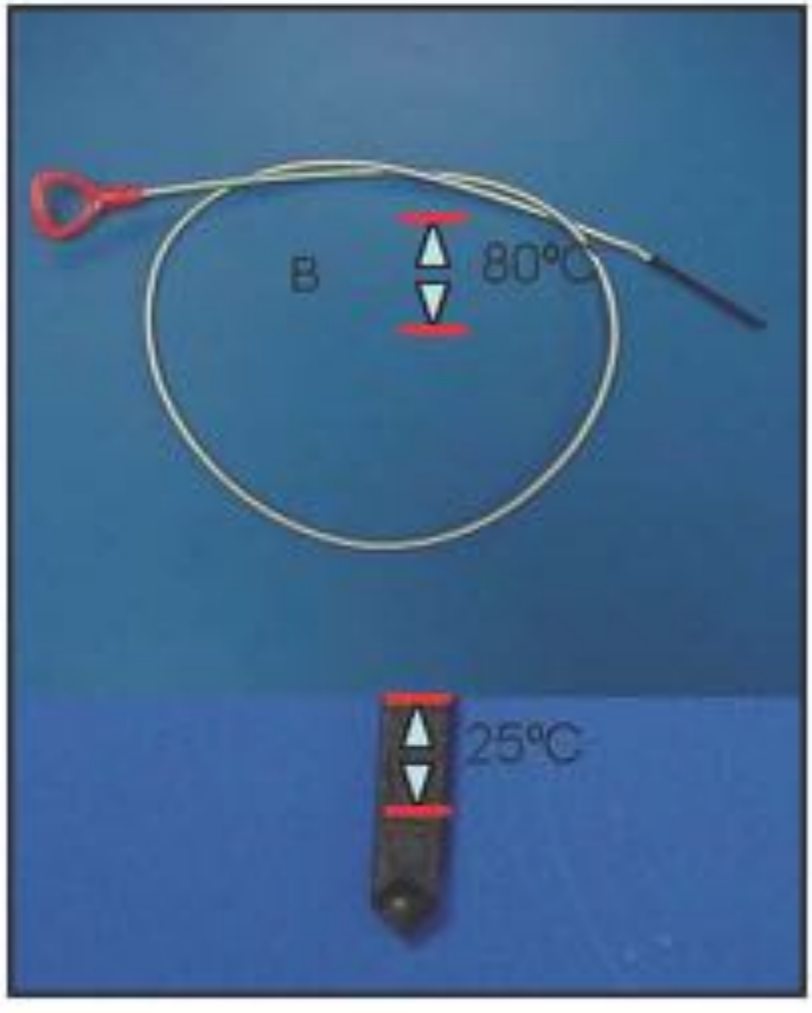

Shift Linkage

Shift lock release is located under an access plug just below the shifter

The shift lever is connected to the transmisision by a cable.

Chassis

Front Suspension

Shock absorber strut front suspension

Lower control arm

Transverse fiberglass-reinforced plastic leaf spring

Rack and Pinion steering

Front Suspension

Reinforced front axle (Code A50) has a higher load rating

- On 3500 series vehicles, load capacity of the front axle increased GAWR from 4,080 lbs to 4,410 lbs.
- Allows heavier loads on front axle

Recommended for:

- RV's
- Armored Vehicles
- Ambulances
- Shuttles

GWAR: Gross axle weight rating

Front Wheel Alignment

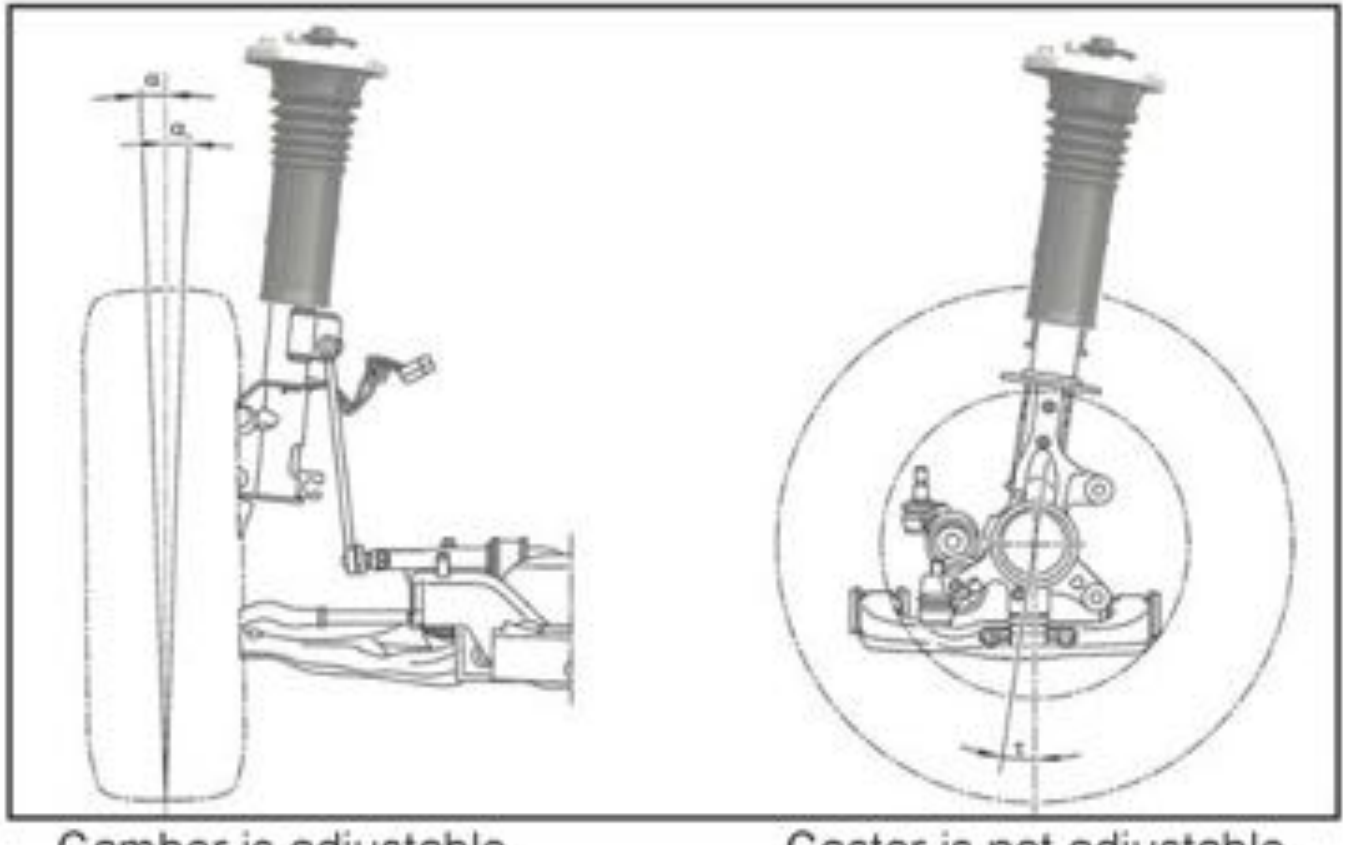

Camber is adjustable

Caster is not adjustable
(Measure to determine
chassis alignment)

Front Wheel Alignment

To obtain alignment specifications the ride height must first be determined by taking the measurements "A" (Front shock) and "B" (Rear shock)

Using these measurements, refer to the chart in WIS for Camber and Caster specifications

Example:
Camber – If dimension "A" is 227 mm then the camber settings is 0^0 00'

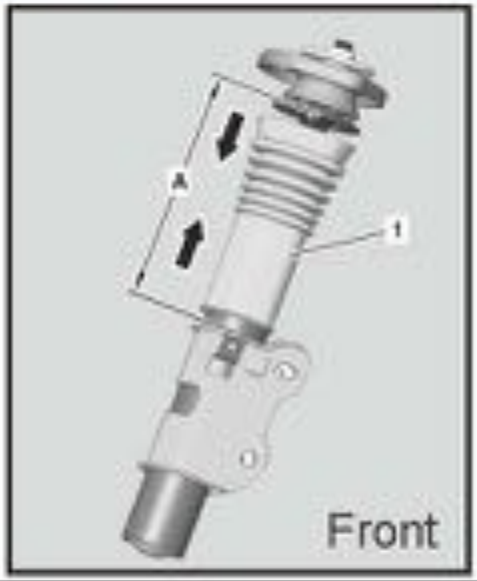

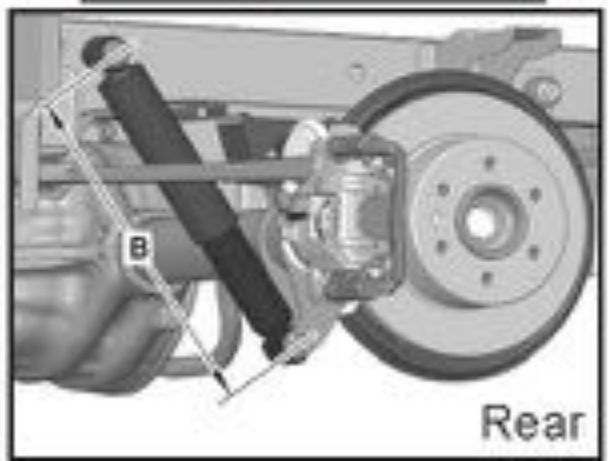

Front Wheel Alignment

Camber is adjusted by replacing the eccentric bolts on the strut. (1)

Both bolts (1 & 2) must be replaced.

Front Wheel Alignment

Toe-in adjustment should include aligning the marks on the steering rack.

Toe out on turns may be incorrect if this step is not performed.

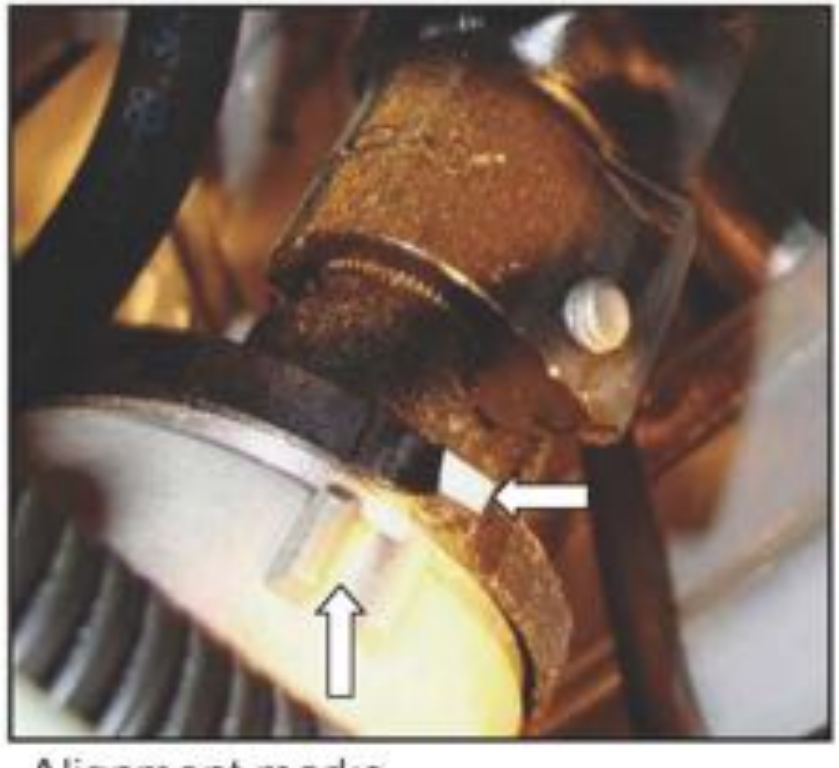

Alignment marks
(upper mark highlighted for clarity)

Front Wheel Alignment

Due to the elasticity of the lower control arm bushings, a spread bar (Tool number 900-589-01-27-00) should be used during toe adjustment.

Front Axle Hub

The front axle steering knuckle can only be replaced as a complete unit together with the wheel hub and wheel bearing

The wheel bearing contains a multipole ring with permanent magnet for the wheel speed sensor

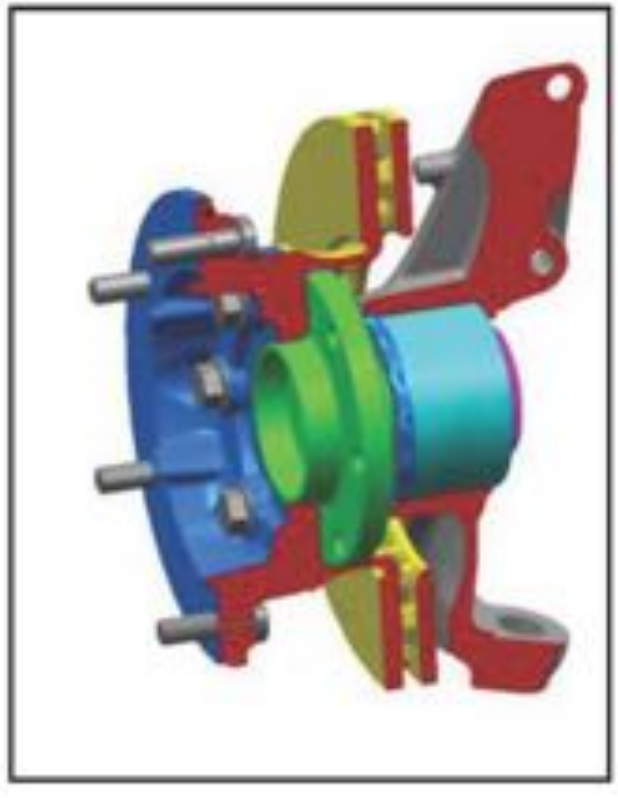

Wheel Speed Sensors

Active wheel speed sensors design:

- Two integrated Hall sensors
- Voltage supplied from ESP control unit
- Triggered by the magnets in the wheel bearing (1)
- Creates a square wave signal

Advantages (Compared to analog sensor)

- Very low speed recognition (~0.3 km/h)
- Direction of travel
- Standstill detection
- Uniform speed signals at all speeds

Rear wheel bearing shown

Steering Column

The steering column is equipped with 2 telescoping sections

The lower section is located between 2 universal joints

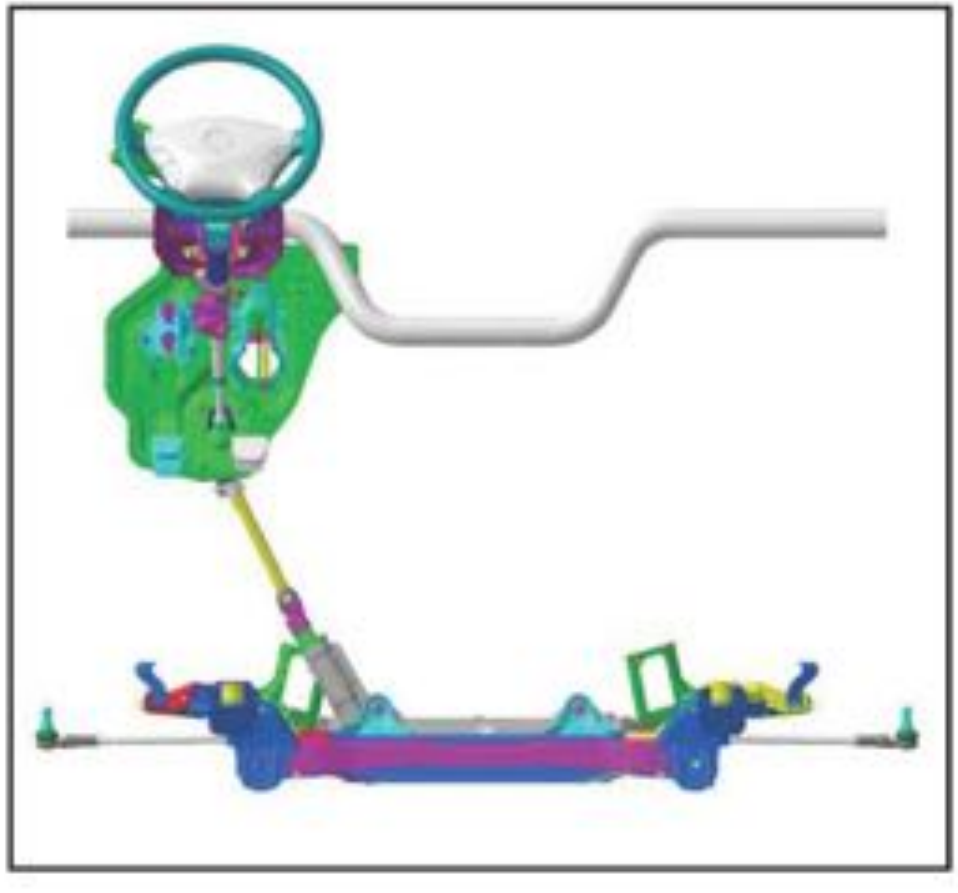

Steering Column

The upper section is located in the upper column tube and has ~60 mm travel

The energy absorption is constant, controlled by unwinding of the steel wire as the tube compresses

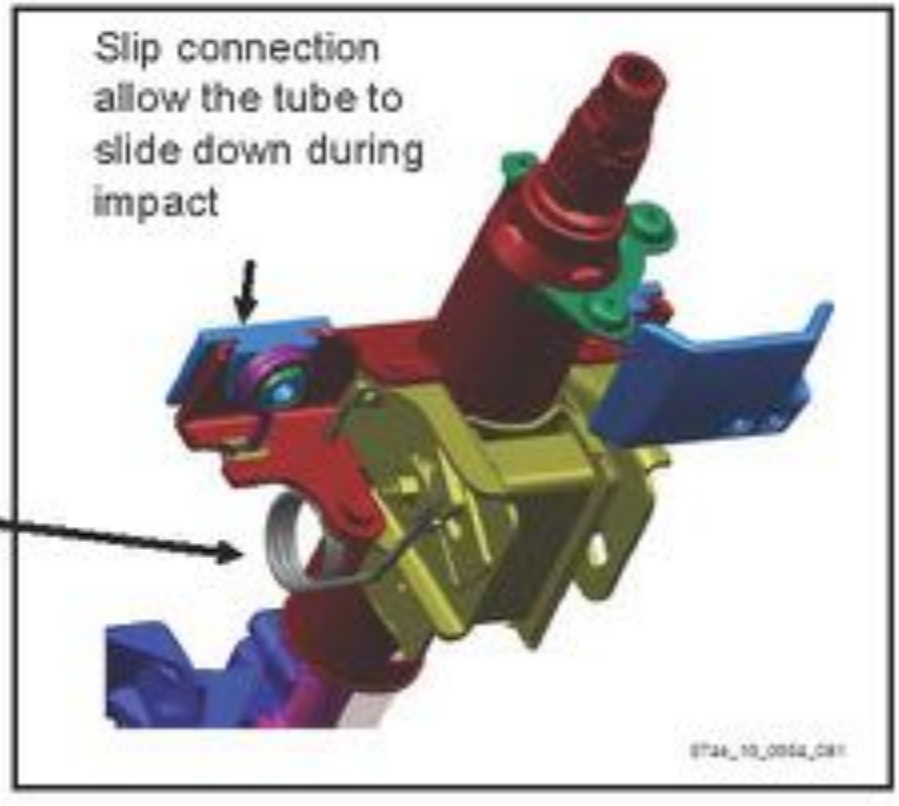

Rear Suspension

The rear axle is equipped with a stabilizer and progressive-rate parabolic multi-leaf springs

Various suspension packages are available:

- CF2 - Front & rear stabilizer
- CF3 – Larger stabilizer diameter
- CF4 – Reinforced front & rear stabilizer bars, different shocks
- CF5 – Harder single stage springs

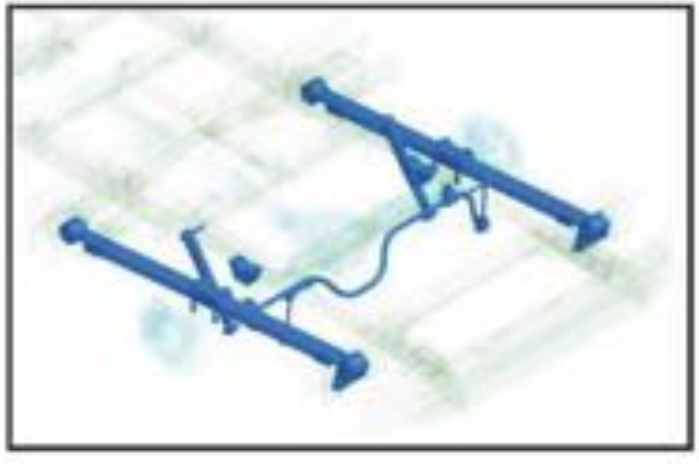

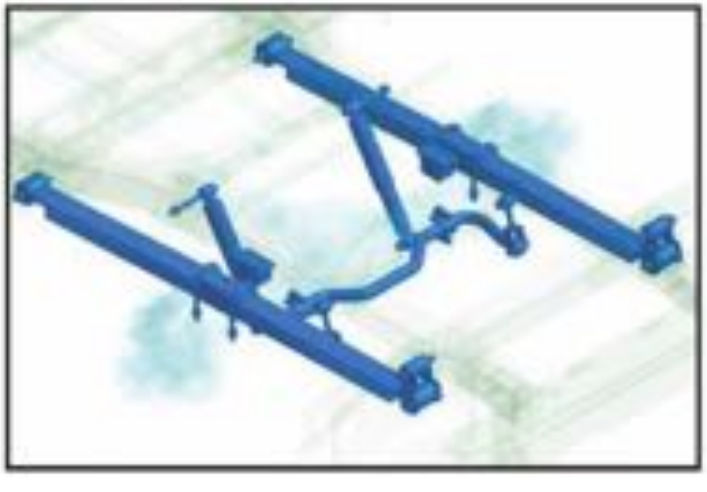

Rear Axle

Axle up to 8550 lbs GVWR

- Hollow shaft pressed into wheel bearing unit
- Hub unit contains a maintenance-free compact compressed bearing
- Hub unit bolted to axle tube
- ABS ring integrated into bearing unit

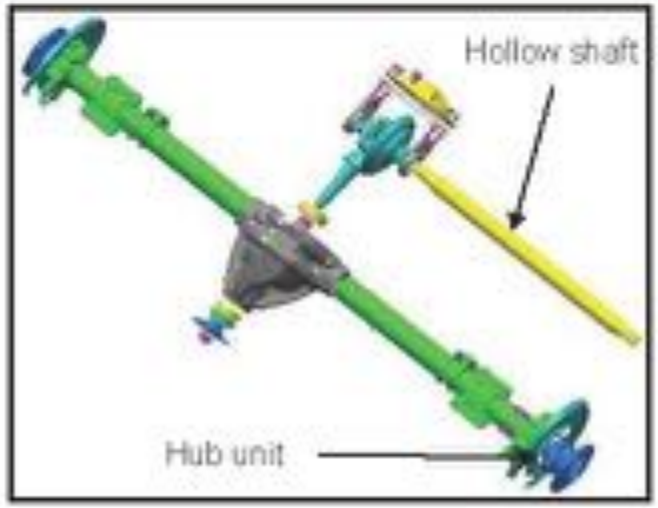

Axle up to 11,030 lbs

- Solid shaft
- Hub unit contains two double-tapered roller bearings
- ABS ring integrated into bearing unit
- Twin wheels use wheel studs

Note: Spare wheel can be used to replace any of the wheels. Due to the wheel offset, the front hub has an additional flange to provide clearance.

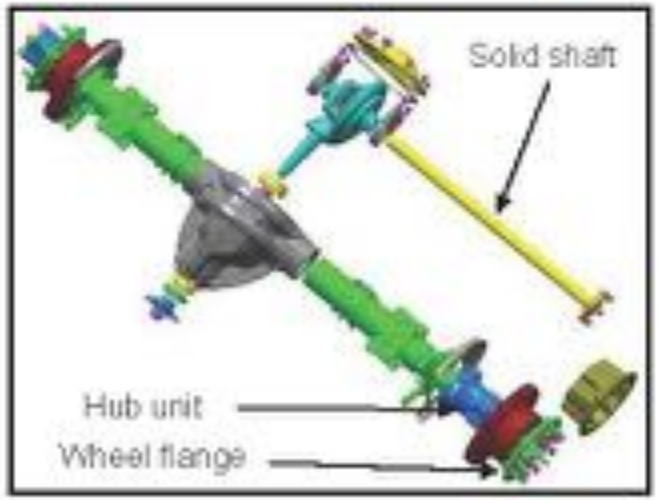

Wheel Torque

Wheel torque specs:

Wheel bolts
- Steel wheel 177 lb-ft (240 Nm)
- Alloy wheel 133 lb-ft (180 Nm)

Wheel nuts (Twin wheels)
- 133 lb-ft (180 Nm)

Tightening Torque Pattern

Acronym List

These acronyms are either used in this presentation or are listed in the Owner's manual.

ABS	Antilock Brake System
ESP	Electronic Stability Program
GAWR	Gross Axle Weight Rating
GCWR	Gross Combination Weight
GTW	Gross Trailer
GVWR	Gross Vehicle Weight Rating
TWR	Trailer Tongue Weight Rating

ESP

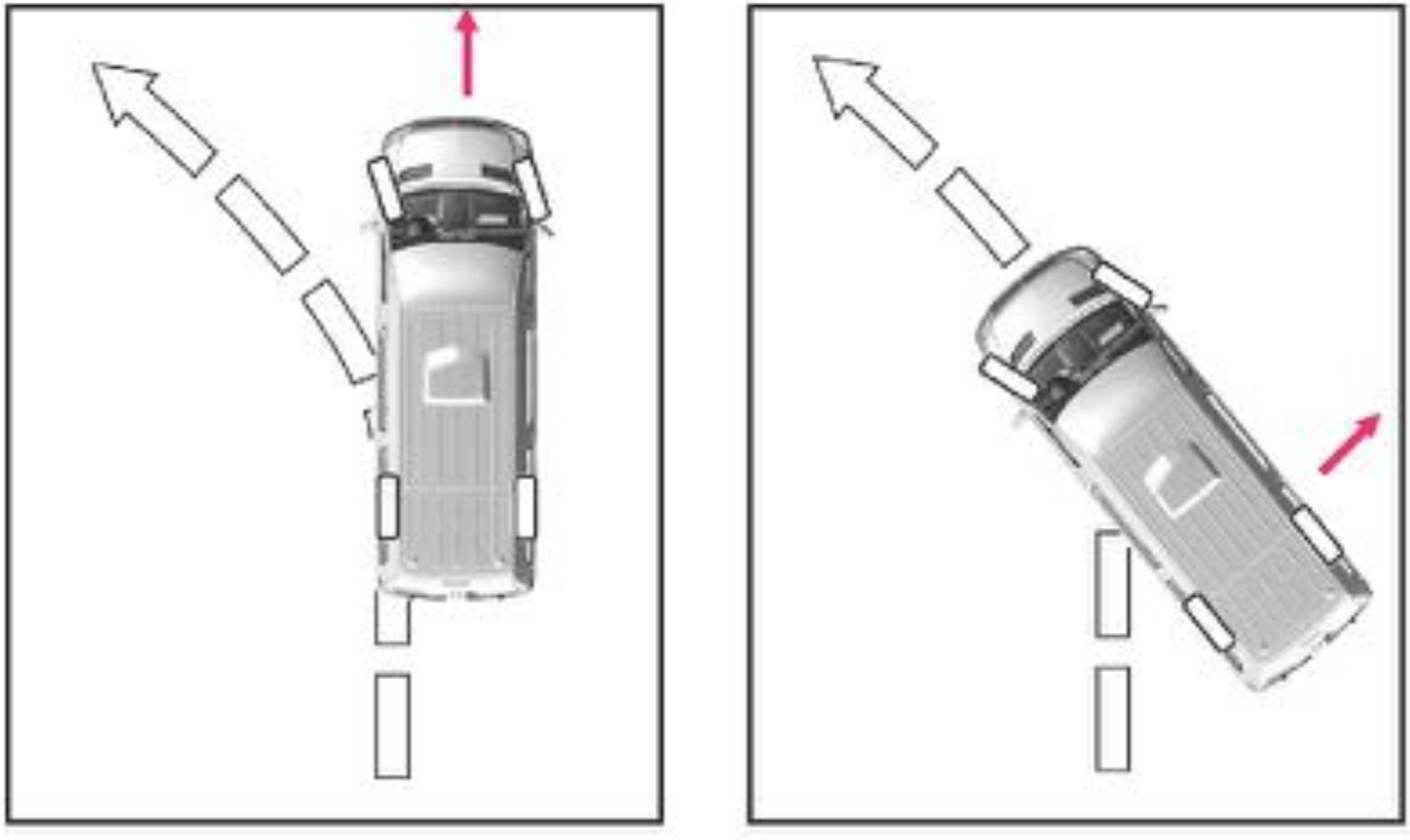

Electronic Stability Program (ESP)

ESP is installed as standard in the ***Sprinter*** model designation 906.

The term ESP includes various subsystems and control functions, all of which are integrated into the ESP control unit.

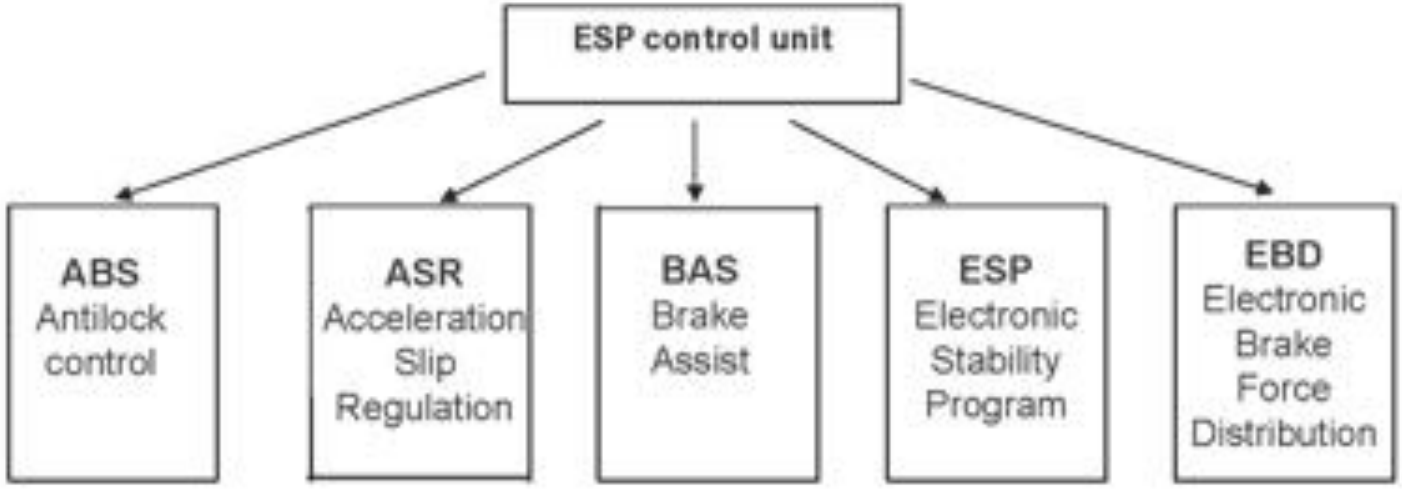

ESP Components

- ESP hydraulic unit
- ESP control unit
- 4 wheel sensors
- Yaw rate sensor
- Stop lamp switch
- Steering angle sensor

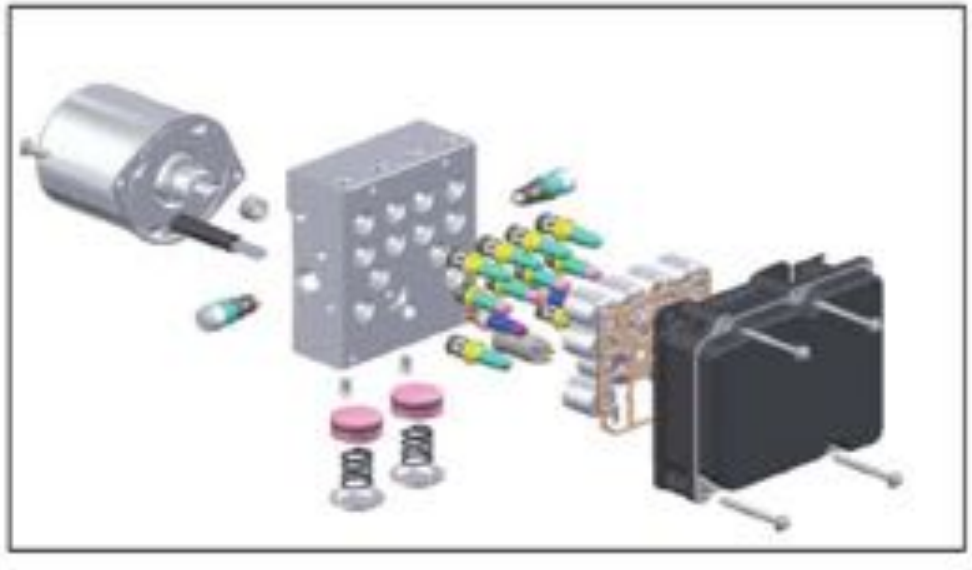

The hydraulic unit and the control unit are bolted together

ESP Components

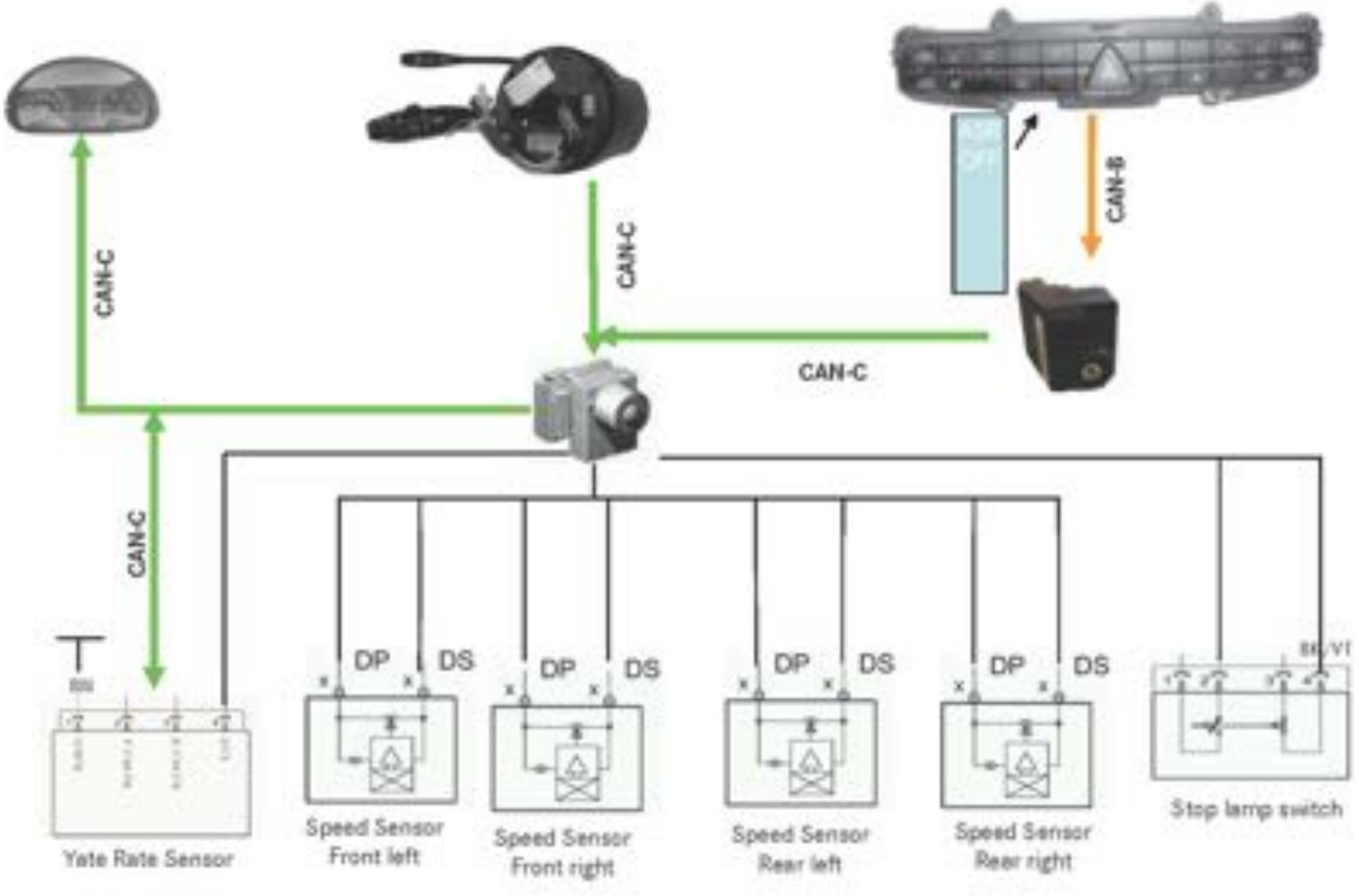

Active ESP Wheel Speed Sensors

The Active wheel speed sensors:

- receives the supply voltage from the control unit.
- are triggered by permanent magnets integrated into the wheel bearing (1)
- Creates a square wave signal to the ESP control unit

Advantages of Active sensors:

- recognition of lower speeds (approx. 0.3 km/h).
- direction of travel recognition
- standstill detection
- uniform wheel speed signals throughout all vehicle speed ranges; only the frequency changes.

Active ESP Wheel Speed Sensors

The active speed sensor monitors changes in magnetic flux. Magnets arranged in alternating poles, as the wheel rotates, the sensor is exposed to the north-south magnetic fields.

The assembly consists of two sensing elements mounted side-by-side with an amplifier chip built into the assembly. The output from each element is processed by an amplifier which converts the input to digital voltage signals. The switching frequency is directly proportional to wheel speed, and because the signal is always present, zero wheel speed can be detected. Since the sensing elements are next to each other, the two voltage signals are always slightly out of phase. This allows the sensor to detect the direction of rotation.

Supply Voltage (DC):	**4,5 V ... 20V**
Signal current:	**I low 7mA ± 20%**
	I high 14mA ± 20%
Operating temperature:	**-40°C ... +150°C**

DRS Sensor

DRS turn rate sensor with integrated lateral and longitudinal acceleration sensor

The turn rate sensor is equipped with:

- longitudinal acceleration sensor
- yaw rate sensor
- acceleration sensor
- fault monitoring (diagnosis takes place in the ESP control unit)

Communicates with the ESP via the CAN

Installation location: Driver seat box

Stop lamp switch

- information from the stop lamp switch is one of the requirements for the activation of BAS and ASR

Steering Angle Sensor

Steering angle sensor

- The steering angle sensor provides steering angle status to the ESP control unit
- The steering angle sensor is integrated into the steering column module N80.
- The correct installation must be observed for the steering angle sensor. The installation is described in WIS. No initialization is necessary.

Steering column module N80

Indicator Lamps

ESP warning lamp (yellow) - flashes during driving when ESP or ASR is active on at least 1 wheel
lights during driving when the ASR system has been switched off by the driver with the ASR OFF switch.

ABS indicator lamp (yellow) - lights on running engine when ABS is inoperative or has switched itself off due to an onboard power supply < 10 V

BAS/ESP indicator lamp (yellow) - lights on running engine when driving safety systems ASR, ESP or BAS are disrupted or have switched themselves off due to an onboard power supply < 10 V

Brake fluid/EBD indicator lamp (red) - Illuminates while the engine is running if the electronic brake force distribution is inoperative or is switched off due to an on-board power supply < 10 V or insufficient brake fluid is contained in the reservoir

ESP Subsystems

The following subsystems are integrated into the ESP system.

Antilock brake system (ABS)

- During braking, if the wheels speed sensors indicate a lock up condition the ABS control actively intervenes in the brake circuit.

- Thanks to individual regulation of the brake pressure at each wheel, wheel locking and therefore possible vehicle instability are counteracted, maintaining steerability and directional control during deceleration

ESP Subsystems

Acceleration Skid Regulation (ASR)

If the ESP electronics recognizes one or both of the drive wheels spinning when driving off, accelerating or during drive operation, an intervention in the brake and/or engine control circuit takes place through the ASR control.

By specifically braking a spinning wheel, the drive axle's other wheel is able to transmit the optimal driving power specified via the friction value. This regulation takes place up to negative deviation from a specific slip and until both drive axle wheels are able to transmit power again. If both wheels spin, despite brake intervention, the engine torque is reduced, even if the accelerator pedal is in the full-load position.

ESP Subsystems

ASR Off

- The "ASR-Off" button (1) is used to switch ASR engine intervention off. All other ESP functions remain fully active. This limitation of the control operation is displayed by the permanent lighting of the ASR/ESP indicator lamp.

- The CAN information "ASR-Off" is transmitted from the upper control panel to the ESP control unit.

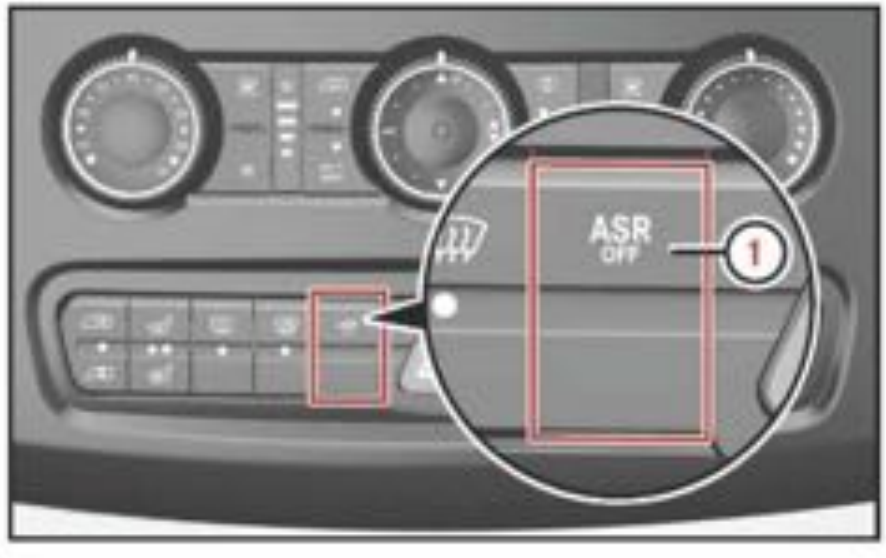

ESP Subsystems

Brake Assist (BAS)

- The Brake Assist System supports the driver during braking in critical situations. If the brakes are applied very quickly, the BAS system automatically provides full brake boost, potentially reducing the braking distance.

ESP Subsystems

Electronic Stability Program (ESP)

During an understeer condition, ESP stabilizes the vehicle by:

- applying the brake to an inside rear wheel

During an oversteer condition, the ESP stabilizes the vehicle by:

- applying the brake to an outside front wheel

Throttle, brake and transmission interventions may also be used to stabilize the vehicle.

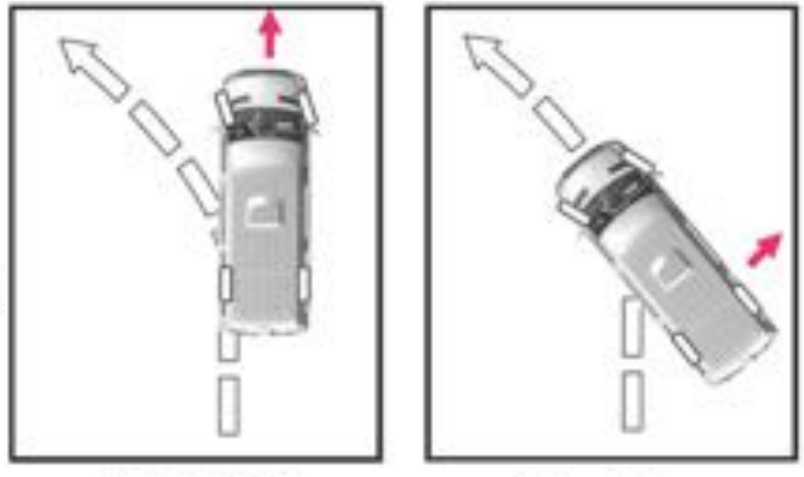

Understeer Oversteer

Click to play movie

ESP Subsystems

Electronic Brake power Distribution (EBD)

EBD regulates the rear wheel brake pressure.

If the rear wheels start to slide (reduced traction) compared to the front axle, the brake pressure at the rear wheels is held constant or reduced.

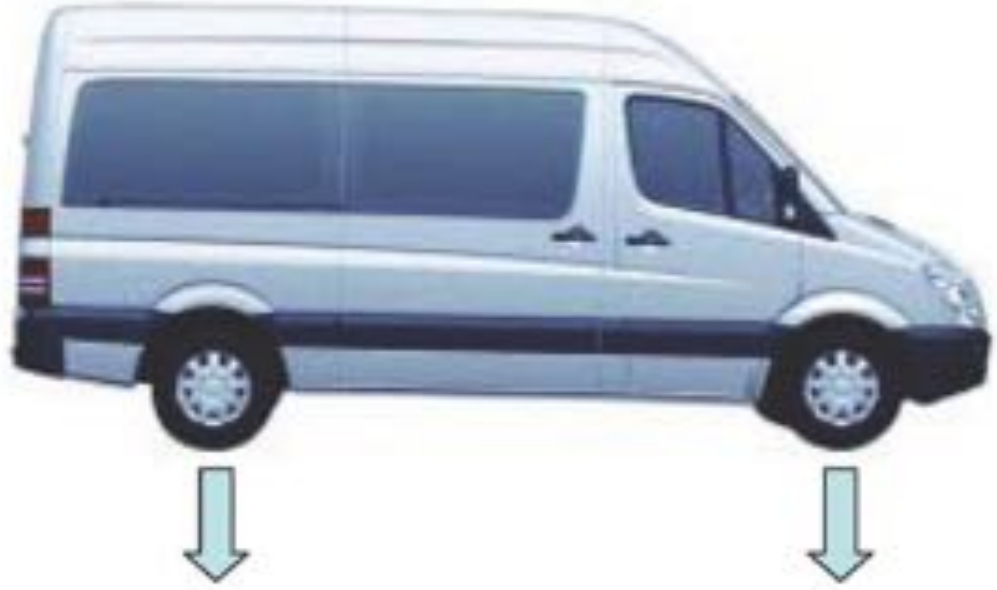

Vehicle load and vehicle dynamics effect rear wheel traction

ESP Subsystems

Engine drag torque control (MSR)

- On release of the accelerator or on shifting down, the drive wheels may lock up in deceleration mode under slippery road conditions.

- The drive axle wheels which are tending to lock up are detected by the ESP system. The ESP control unit transmits a data bus signal to the engine control unit. The engine control unit increases the engine torque and thereby prevents the drive wheels from locking up.

ESP Subsystems

Load Adaptive Control (LAC)

- A self-learning algorithm integrated in ESP to determine vehicle masses and center of gravity and to detect driving resistance on the basis of various sensor values. LAC improves hill starts with μ split as well as the braking response. LAC indirectly contributes to a reduction in the tendency to roll over.

ESP Subsystems

Roll Over Mitigation (ROM)

- Improves the handling characteristics in the event of increasing steering angle and a fast speed. The ROM recognizes critical lateral acceleration as soon as it starts to occur. The rollover tendency is reduced through a specific increase of the brake pressure on the corresponding wheels. ROM is supported by the LAC vehicle mass detection.

ESP Subsystems

Roll Movement Intervention (RMI)

- Increases the effectiveness of ESP in highly dynamic manoeuvres by further increasing tilt stability via brake intervention at the outer wheel in the event of critical lateral acceleration.

Understeering Control (USC):

- Stabilizes on strong understeering, as occurs when driving fast through small curve radii. The USC subsystem attempts, by building up brake pressure at all wheels, to reduce speed in order to return the vehicle to a driving condition in which stabilizing brake forces can again be implemented.

ESP Subsystems

Cruise control function (TPM):

The cruise control switch input signals are processed in the ESP control unit and corresponding actuations are generated by the ESP control unit to the CDI control unit N3/30

Start-off assist (AAS):

For hill starts, brake pressure applied by the driver is held for a further 2 s after the brake pedal has been released. This function is only activated on inclines > than 4% with a driving gear engaged. Even when reverse gear is engaged.

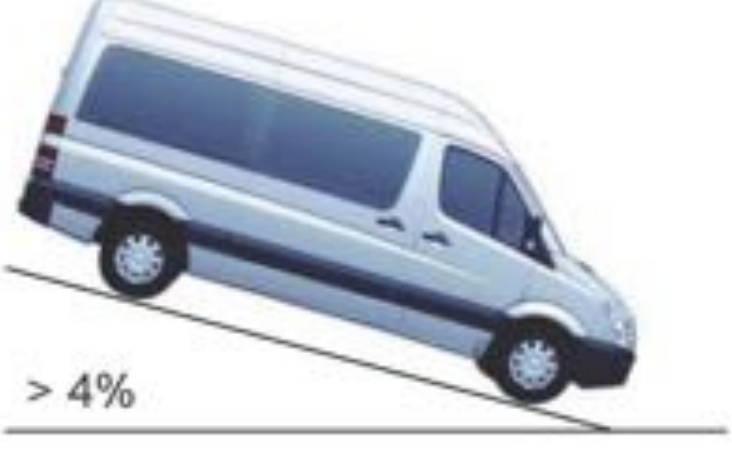

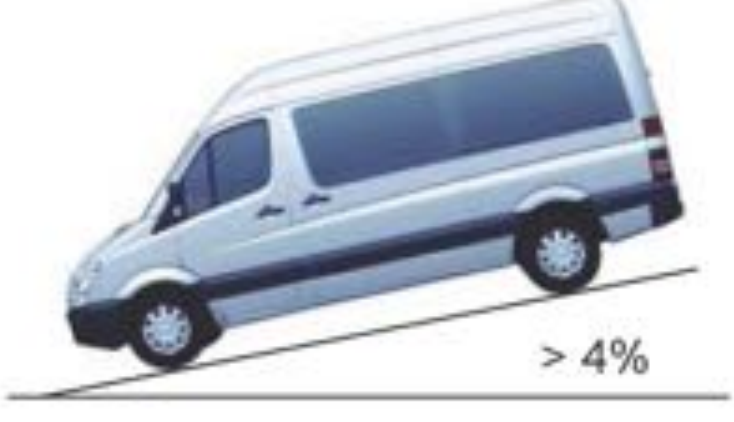

ESP Subsystems

Trailer Stability Control

Task

- Detect when a trailer is being towed
- Detect and eliminate sway

Function

First stage – brake intervention at the front wheels on alternating sides to counteract sway

Second stage – engine torque reduced and brake pressure applied to all four wheels as well as control interventions at individual wheels (brake lights activated)

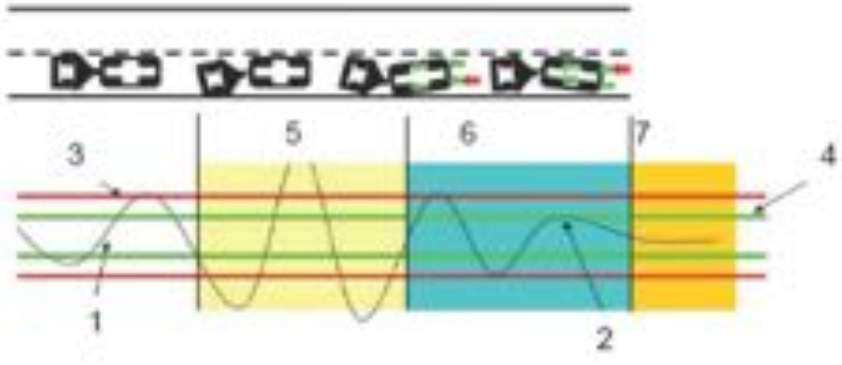

TSA function schematic

1 Vibration signal
2 Vibration less than entry threshold
3 Entry threshold
4 Exit threshold
5 Detection
6 Control
7 End of control

Acronyms

AAS –	Start off assist
ABS –	Antilock Brake System
ASR –	Anti Skid Regulation
BAS –	Brake Assist System
EBD –	Electronic Brake Distribution
ESP –	Electronic Stability Program
DSR –	Turn rate sensor
LAC –	Load Adaptive Control
MSR –	Engine drag torque control
RMI –	Roll Movement Intervention
ROM –	Roll Over Mitigation
TPM –	Tempomat cruise control
USC –	Understeering Control
WIS –	Workshop Instruction System

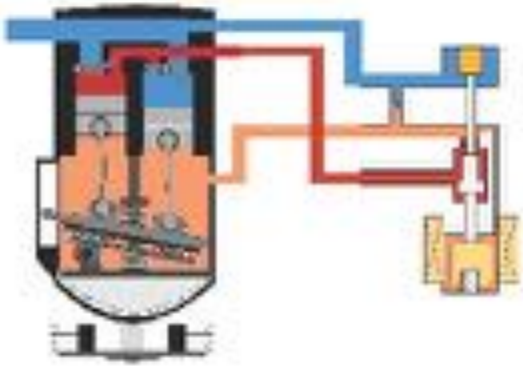

Climate Control

1 Stationary heater timer
2 Side window defroster vents
3 Adjustment wheel for air vents
4 Side air vents
5 Adjustment wheel for side and defroster vents
6 Swiveling center vents
7 Adjustment wheel for center vents
8 Operating unit for heater / rear heater
9 Heated rear window / heated windshield switch
10 Stationary heater / booster heater switch

Climate Control

1 Defroster nozzle
2 Long-range nozzles
3 Side air vents
4 Center vents
5 Blower motor
6 Operating unit
7 Center tower outlet
8 Footwell duct
9 Condensation water drain hose
10 Floor air duct

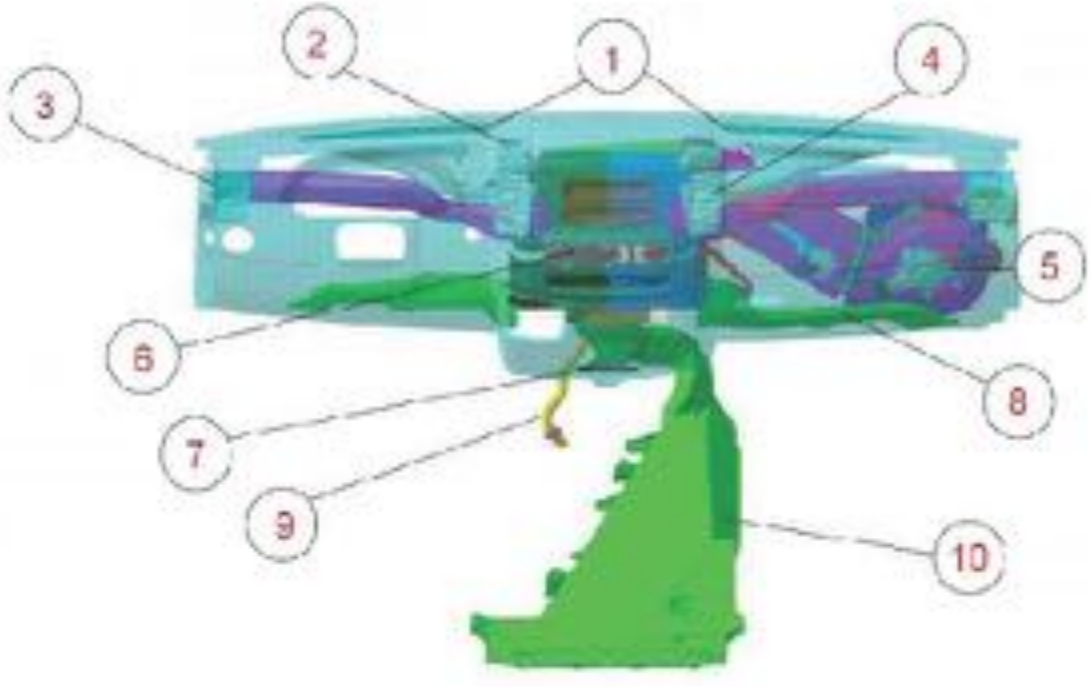

Actuator Motors

- 3 Actuator motors on ventilation box
- 2 with potentiometers
  - M16/8 Blending air flap actuator motor
  - M16/22 Air distribution actuator motor
- 1 without a potentiometer
  - M16/21Fresh air/recirculated air flap actuator

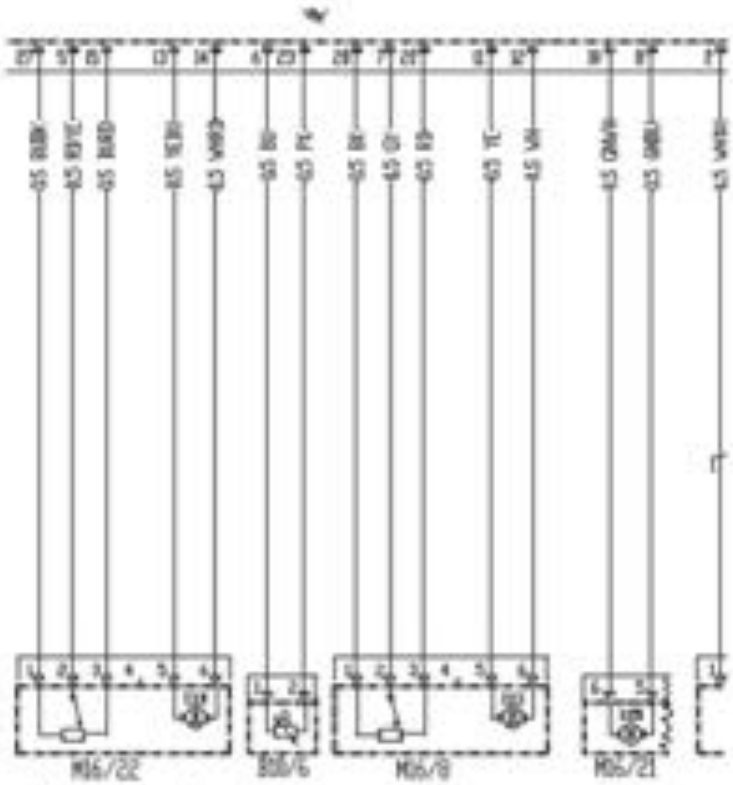

- Additional temperature blend actuator motor on advanced roof mounted auxiliary A/C also controlled via ACC control module

Actuator Motor Locations

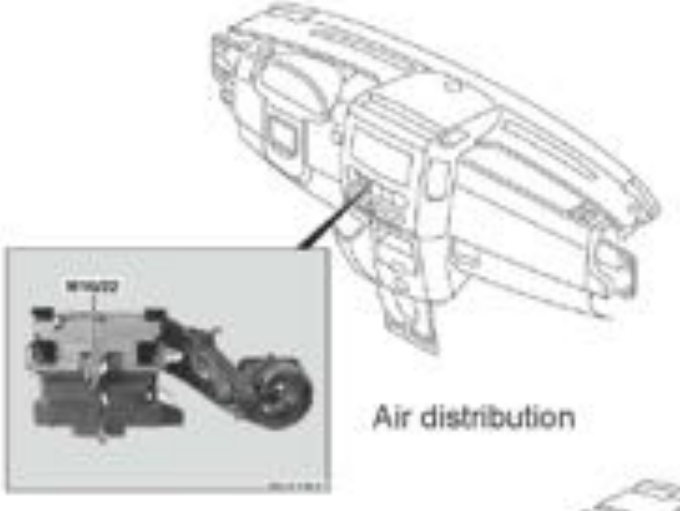

Air distribution

Fresh air / recir

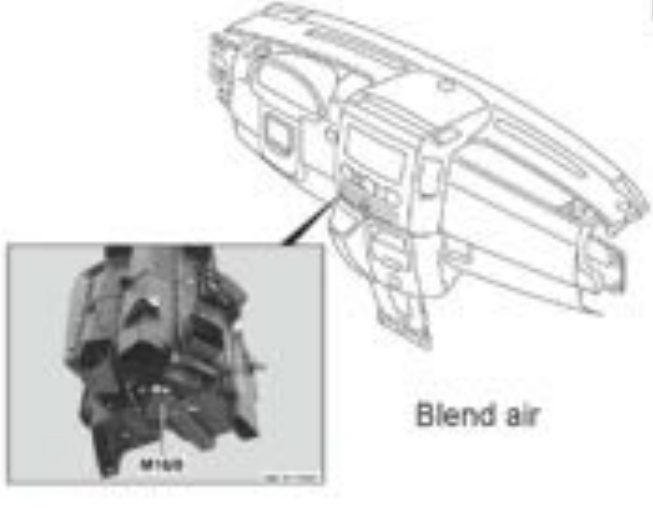

Blend air

Temperature Regulation

- Early Sprinter (901 – 905 series) heater core regulated via a water control valve
- 906 series uses a blend air flap

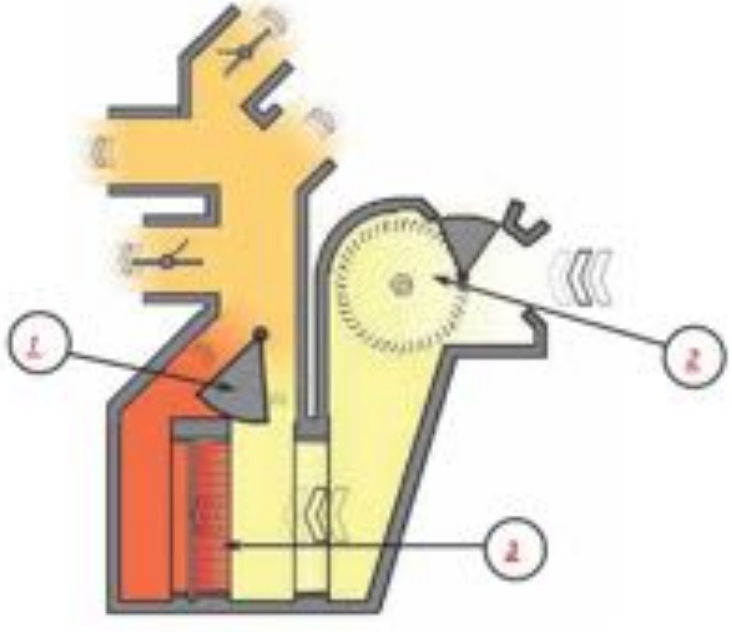

1 Blend air flap
2 Blower
3 Heat exchanger

Temperature Regulation

- Interior temp brought to desired point via stepper motor control of blend air flap
- No duct temp sensors
- Interior temp sensor on ACC control module
- Evaporator temp sensor to prevent evap freezing

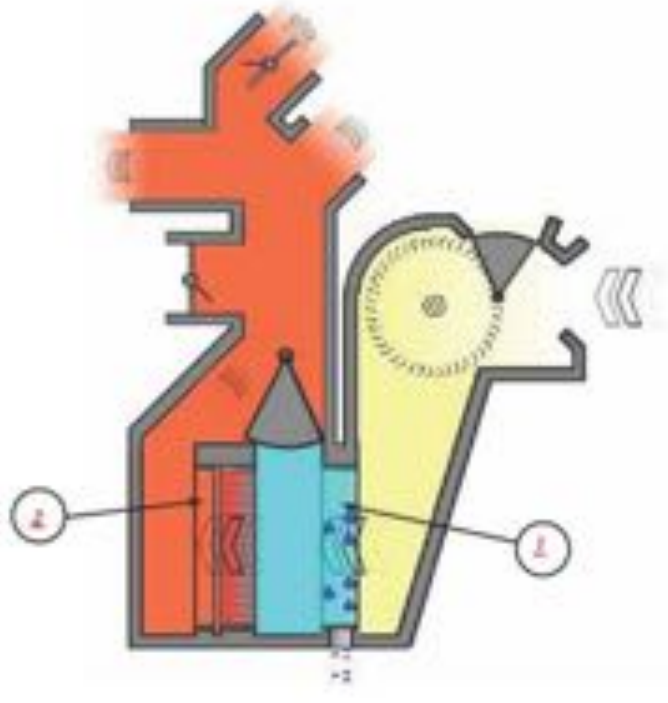

1 Evaporator
2 PTC heater booster

Tempmatic Control Unit

Tempmatic

Tempmatic with rear AC / rear heater

- CAN B component
- Control of
  - Actuator motors
  - AC compressor (s)
  - Blower motors

Tempmatic Control Unit

1 Temp selector switch
2 Blower speed / air flow switch
3 Air recirc. mode switch
4 Reheat function switch
5 Air distribution dial
6 AC OFF / residual warmth switch*

1 Rear AC
2 Rear airflow control
3 Rear temp. regulation

*As of 09/2008 vehicles have no REST function, switch change from AC OFF to AC switch AC ON when LED is illuminated

Reheat Function

- ACC control module maintains temperature but AC compressor is regulated to 100%
- Dehumidifies air keep windows fog free

4 Reheat function button

PTC (Positive Temperature Coefficient) Heater

- Compensates for reduction of residual heat from CDI engines
- Necessary to fulfill legal requirements for de-icing windshield as well as heating comfort
- 1800 watt (150 amp fuse protected)
- Regulated via pulsed signal to 4 heating register grids operated simultaneously (50Hz)
- High electrical load signal via alternator signal can reduce or shut off PTC

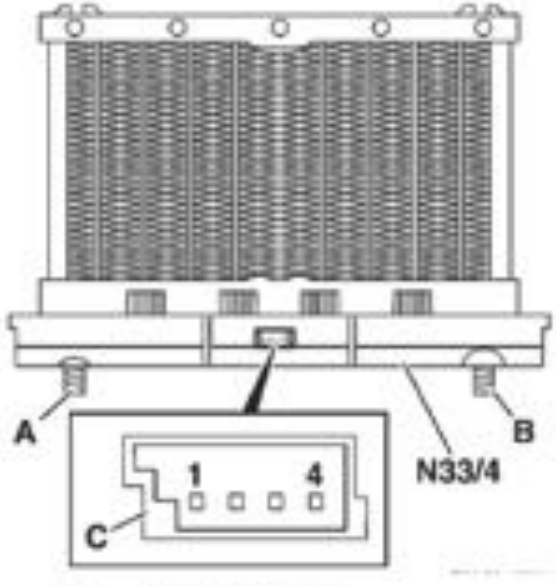

A	Ground 25 mm²
B	Positive 25 mm²
C	Connector
1	CAN low (CAN B)
2	CAN high (CAN B)
3	Ter. 30
4	Alternator DF signal

PTC (Positive Temperature Coefficient) Heater

- PTC heater controlled as needed
- Control unit integrated into PTC activated by ACC control unit
  - Regulated internally
  - Deactivated in stages when interior temp has been reach
- Cut-in conditions for start up of PTC heater
  - Alternator / idle stable
  - Coolant temp < 176°F (80°C)
  - Outside temp < 50°F (10°C)
- Cut-out conditions
  - Coolant temp >176°F (80°C)
  - Outside temp > 50°F (10°C)
  - RPM = 0
  - High electrical load via alternator
  - Overheat protection (AC and PTC will be shut off)
  - AC compressor and PTC may momentary shut off during hard acceleration

Refrigerant Circuit

Evaporator

Compressor

Condenser

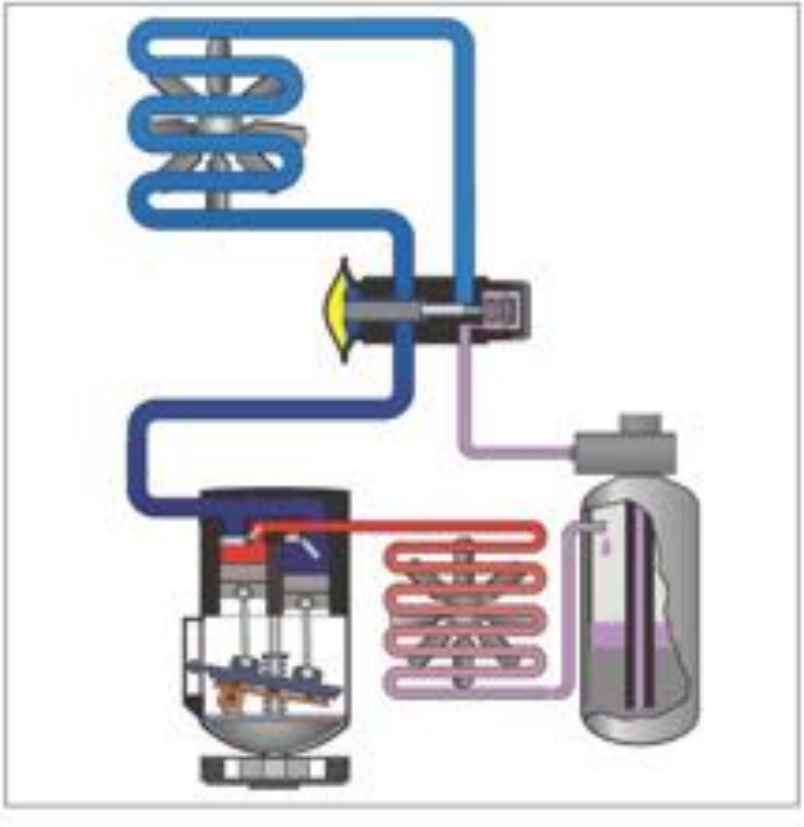

Expansion valve

Filter drier

Main Refrigerant Circuit

- Denso 7SEU 17 compressor
  - Controlled via electronic pressure regulator
  - Output power varied between 2% - 100%

- Belt pulley
  - Acts as torque damper and torque limiter
  - Pulley hub fixed to AC compressor shaft via rubber elements with belt pulley
  - If compressor locks, pulley continues to turn and rubber elements deform

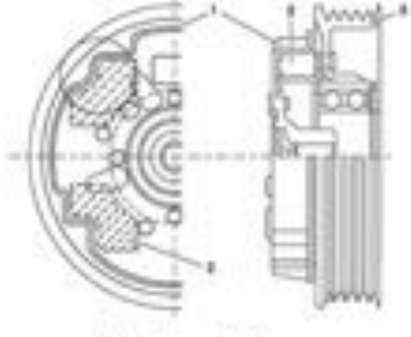

1 Pulley hub
2 Rubber elements
3 Belt pulley

Main Refrigerant Circuit

Refrigerant compressor design 7SEU 17

- There are seven pistons in the compressor that are connected to the swash plate by means of sliding shoes.
- The swash plate is connected to the stop plate in the crankcase and mounted moveably on the refrigerant compressor shaft.
- The stop plate and the belt pulley are fixed to the refrigerant compressor shaft.
- The control valve actuated externally to adjust the swash plate is located in the rear housing part.

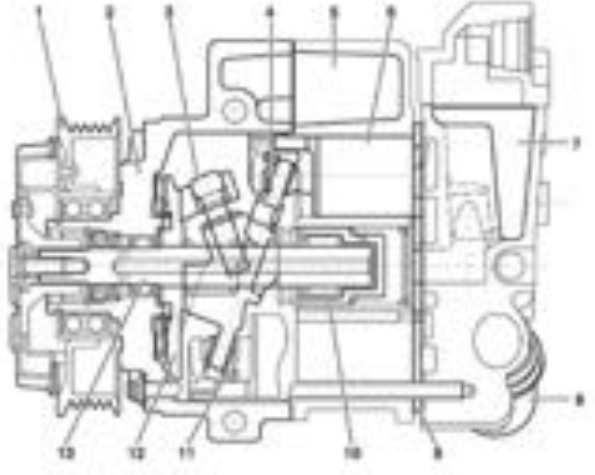

1 Belt pulley
2 Crankcase
3 Guide pin
4 Swash plate
5 Damping reservoir (pressure side)
6 Pistons
7 Damping reservoir (suction side)
8 Refrigerant compressor control valve
9 Valve plate
10 Coil body
11 Sliding shoe
12 Stop plate
13 Refrigerant compressor shaft

Protection function of the compressor:

- From 24 bar refrigerant pressure the compressor is regulated down
- From a coolant temperature of 115°C the compressor output is regulated down and at 125°C turned completely off.
- From an engine rpm of 4400 rpm the compressor output is regulated down and from 5500 rpm it is held at 50%.

AC Compressor Control

- Compressor relief valve (3)
  - Protection from overpressure
  - Spring loaded / opens at >40 bar
- Compressor control valve
  - Regulates compressor output volume by controlling swept volume of compressor between 2% and 100%
  - PWM signal at 400Hz
  - Coil resistance 6Ω
  - 0.2 A turn on (PWM at approx 20%)
  - 0.8 A max cooling (PWM at approx. 80%)

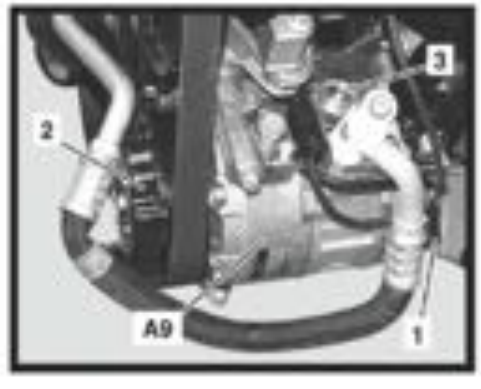

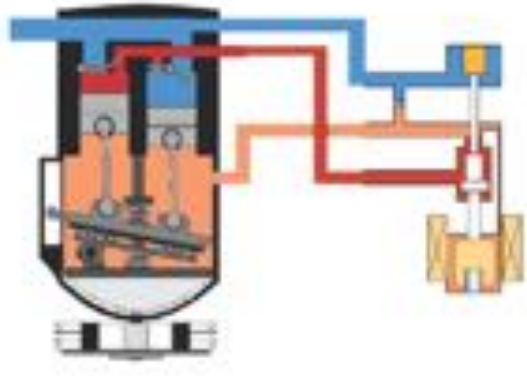

Evaporator Temperature Sensor (B10/6)

- NTC (Negative temperature coefficient) resistor
- Located right side of AC housing in front of evaporator
- Wired directly to ACC control module
- Used to prevent evaporator freezing

Location shown in WIS in incorrect
Arrow shows correct location

Refrigerant Pressure Sensor (B12)

- Located at top of condenser in high pressure line
- Monitor high side pressure
  - < 2 bar or >30 bar system turned off
  - From 24 bar ACC regulates compressor for pressure reduction

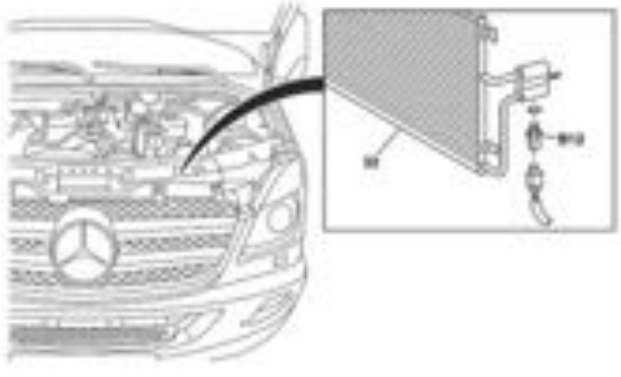

Interior Temperature Sensor

- Integrated into ACC control module
- Measure interior temp. 2-3 cm in front of NTC resistor
- Solar radiation is determined via photo diode
- Another NTC resistor measures sensor circuit board temperature (compensation sensor)
- Non ventilated

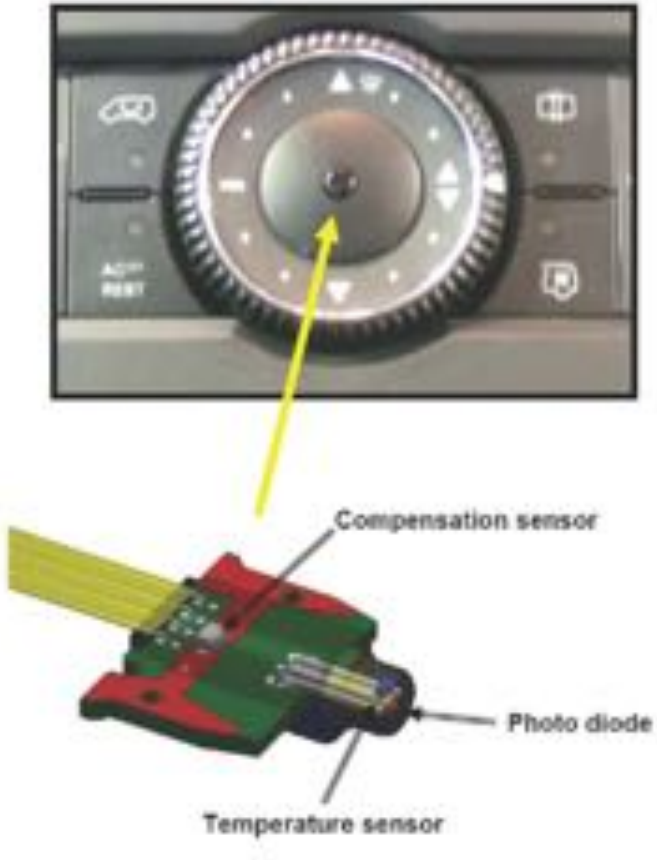

Outside Temperature Sensor (B14)

- NTC thermistor
- Wired to SAM
- CAN signal to ACC control module

Auxiliary Fan (M4/2)

- ONLY on non-OM642 engine vehicles
- 2 stage
- Stage1 activated at
  - Coolant temp 224°F (107°C) or 16 bar refrigerant pressure
- Stage 2 activated at
  - Coolant temp 239°F (115°C) or 20 bar refrigerant pressure

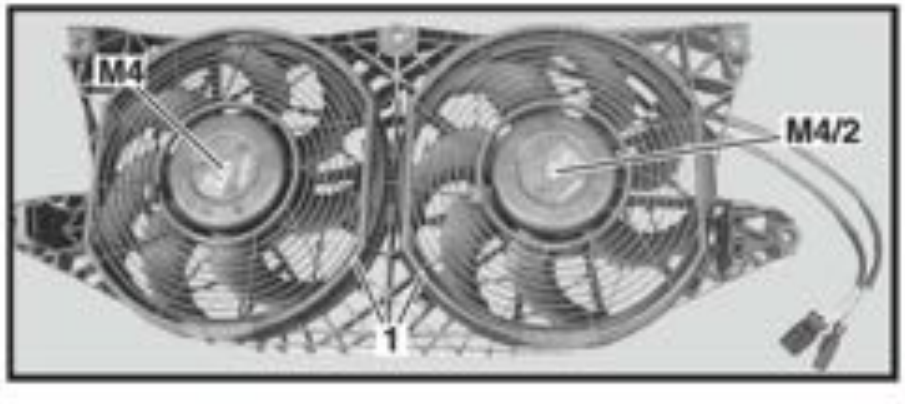

Auxillary Rear Heating and AC Systems

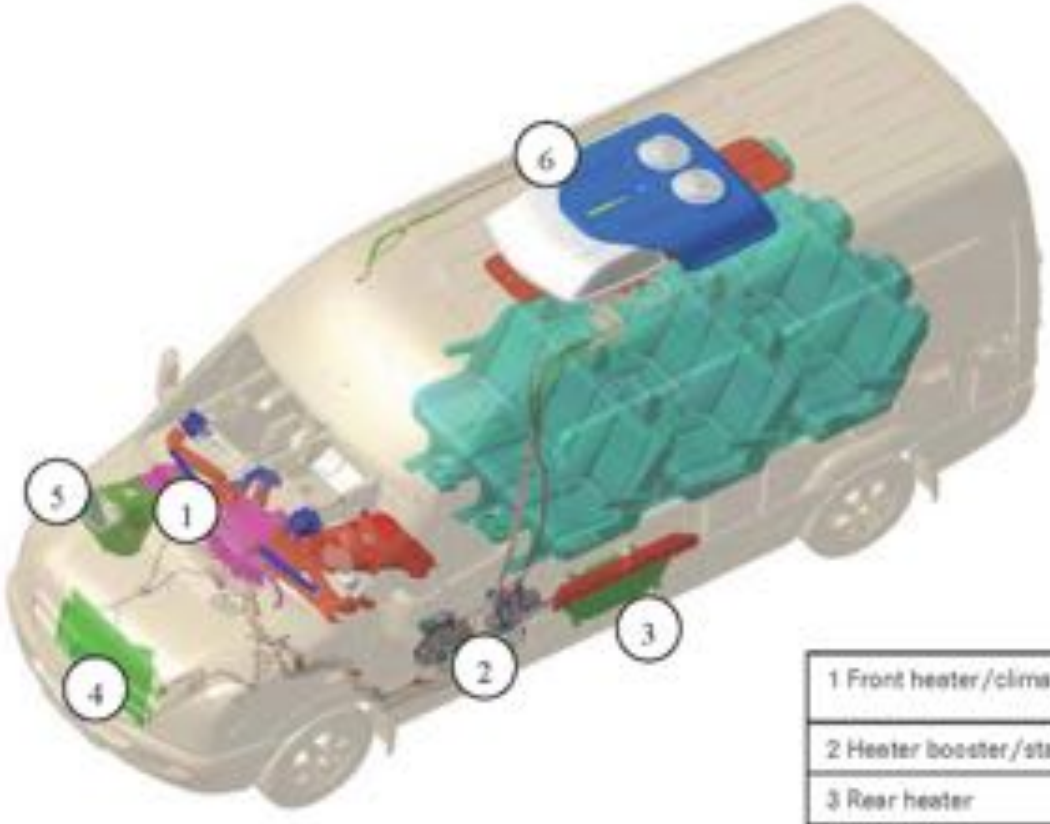

1 Front heater/climate control with electric heater booster (PTC)
2 Heater booster/stationary heater/tandem heating
3 Rear heater
4 condenser
5 Air intake with filter
6 Rear AC system

Rear AC

- This version not available for MY10 NAFTA version vehicles
- Integrated into front AC circuit
- No independent temp sensor
  - Regulated via ACC temp sensor
- Operating requirements
  - Rear AC ON
  - Engine running

Rear AC

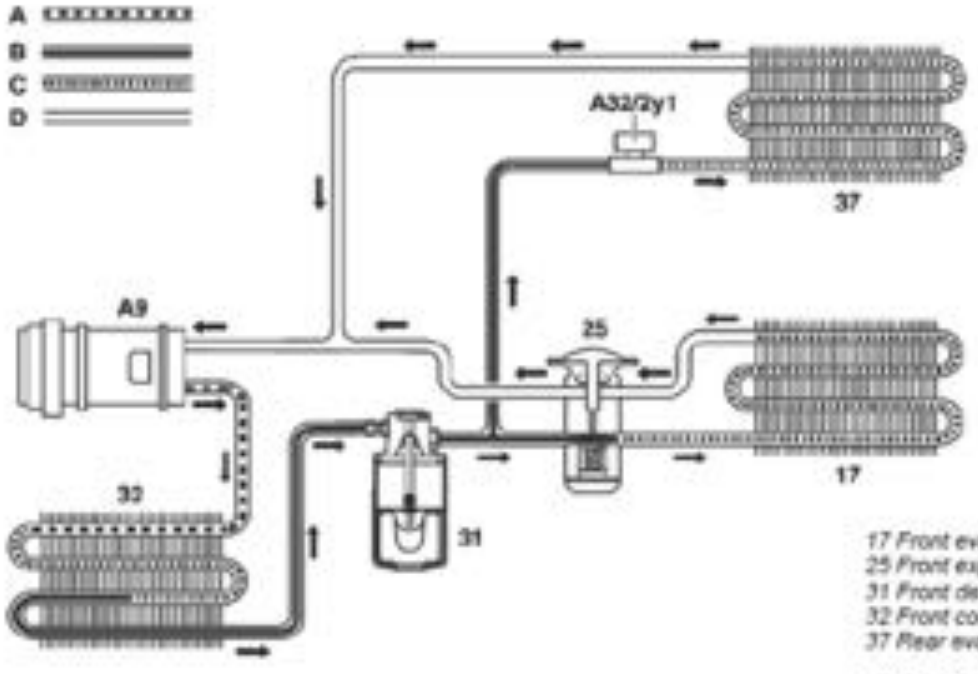

17 Front evaporator
25 Front expansion valve
31 Front desiccant cartridge
32 Front condenser
37 Rear evaporator

A High pressure (gaseous)
B High pressure (liquid)
C Low pressure (liquid)
D Low pressure (gaseous)

A9 Refrigerant compressor
A32/2y1 Refrigerant shutoff valve

High Performance Rear AC (H08)

- Available rear AC option for MY10

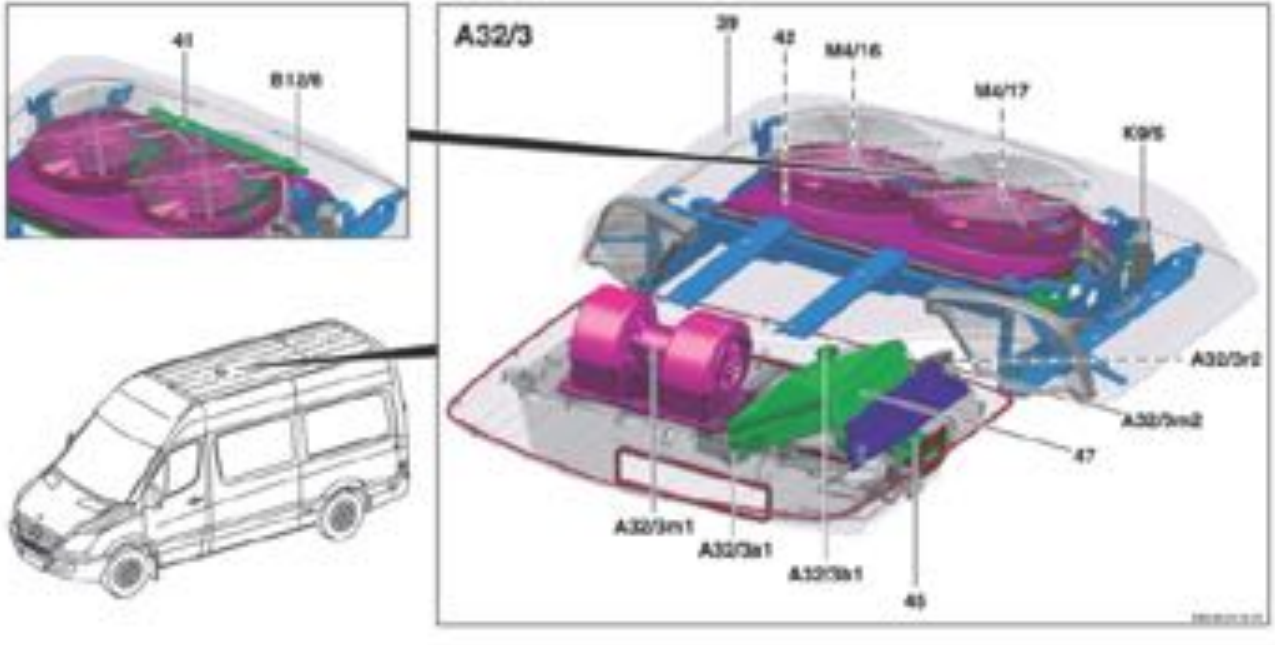

39 Cover panel
41 Roof air conditioning desiccant cartridge
42 Roof air conditioning condenser
45 Roof air conditioning expansion valve
47 Roof air conditioning evaporator

A32/3 Rear heavy duty automatic air conditioning recirculation unit
A32/3a1 Blower regulator
A32/3b1 Evaporator temperature sensor
A32/3n1 Blower motor

A32/3n2 Blend air flap actuator motor
A32/3r2 Blend air flap potentiometer
B12/6 Roof refrigerant pressure sensor
K9/5 Roof additional fan relay
M4/16 Roof air conditioner 1 additional fan
M4/17 Roof air conditioner 2 additional fan

High Performance Rear AC (H08)

- Separate:
  - AC compressor w/ clutch
  - Evaporator
  - Condenser
  - Expansion valve
  - Drier
  - Blend air flap actuator

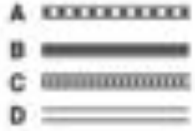

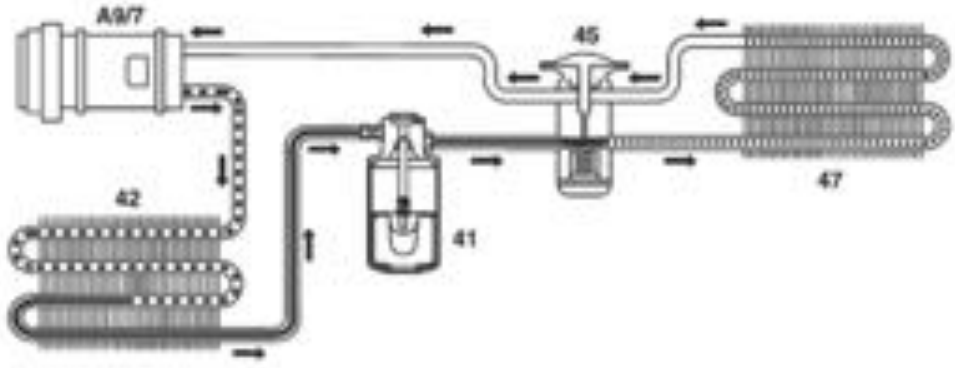

41 Roof air conditioning desiccant cartridge
42 Roof air conditioning condenser
45 Roof air conditioning expansion valve
47 Roof air conditioning evaporator

A High pressure (gaseous)
B High pressure (liquid)
C Low pressure (liquid)
D Low pressure (gaseous)

A9/7 2nd refrigerant compressor

High Performance Rear AC (H08)

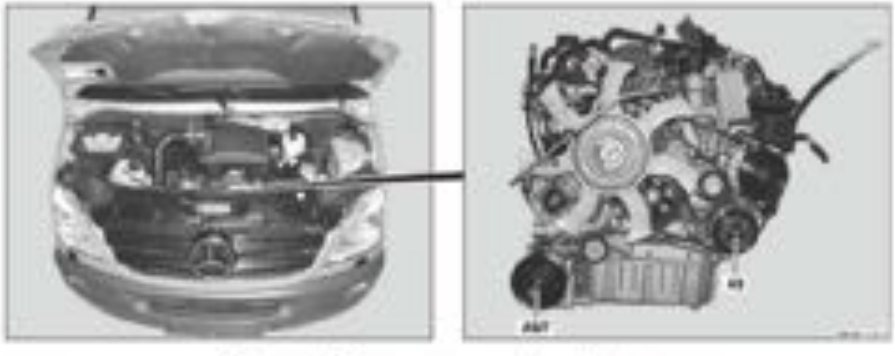

Rear AC compressor location

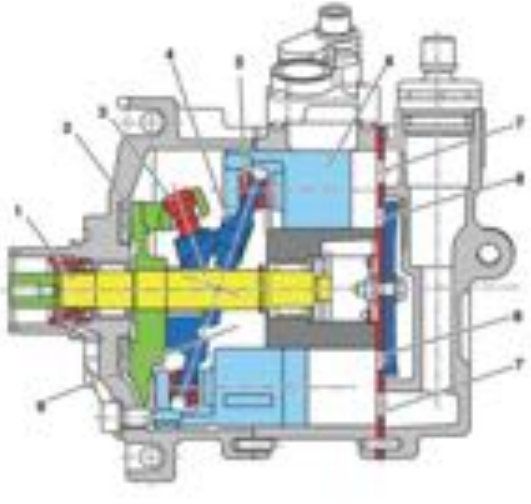

1 Refrigerant compressor shaft
2 Clutch plate
3 Alignment pin
4 Swash plate
5 Sliding shoe
6 Piston
7 Intake valve
8 Pressure control valve
9 Swash-plate chamber

A9/7y1

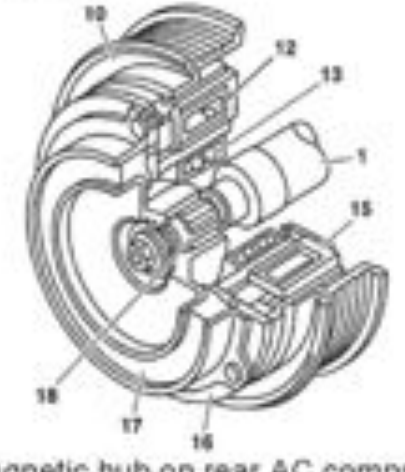

Magnetic hub on rear AC compressor

1 Refrigerant compressor shaft
10 Belt pulley
12 Fuse
13 Ball bearing
15 Solenoid
16 Pressure plate
17 Rubber insert
18 Spline

A9/7y1 2nd refrigerant compressor magnetic clutch

Rear AC

- Does not take in fresh air – only recirc
- Dust filter installed behind rear AC grill panel
- Must be replace at each maintenance service
  - Also applies to non-high performance rear AC systems

Rear Heater (H13)

- Additional heater core connected in parallel with front heater core
- Behind B pillar / left side / under-floor
- Temp and air volume controlled on ACC control module
- No temp sensors
- Coolant control valve A321/y1used to regulate flow thru heater core based upon driver demand
- Recirculation coolant pump (M13/4) utilized
- PWM controlled coolant control valve in housing

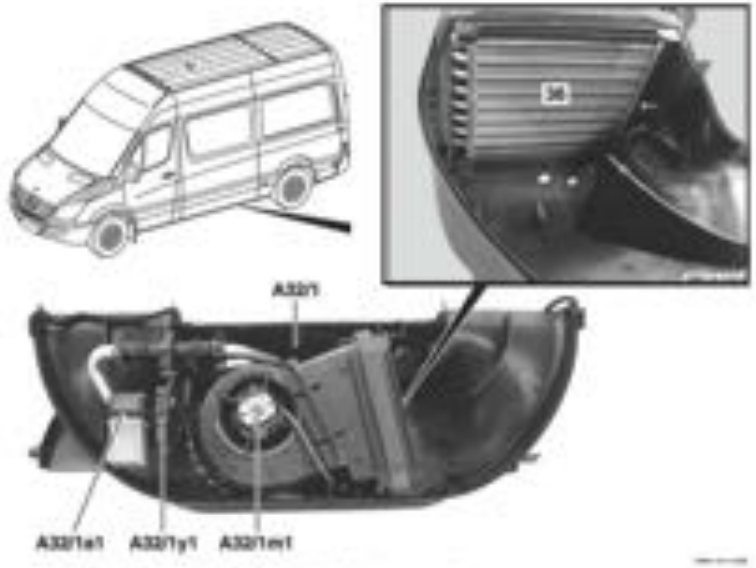

A32/1 Heater unit
A32/1a1 Blower motor regulator
A321/y1 Coolant control valve
A32/1m1 Blower motor

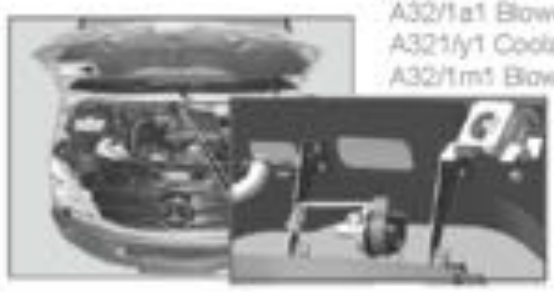

M13/4

Rear Heater (H13)

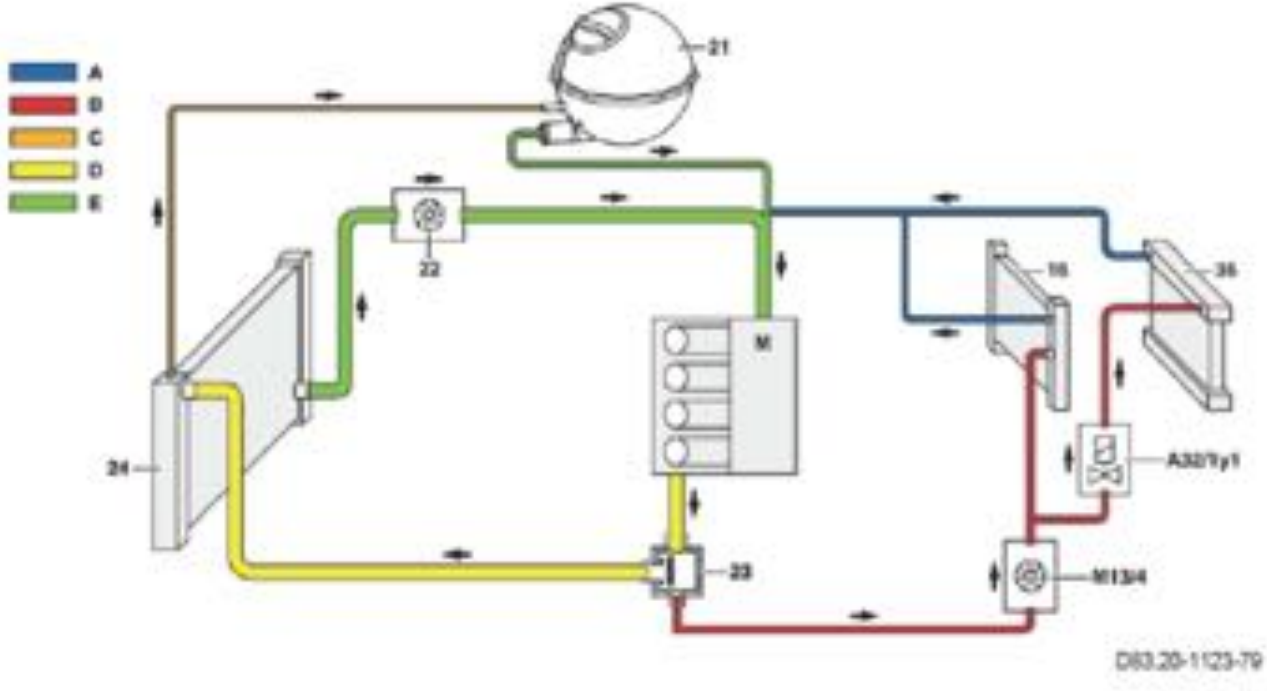

16 Front heater heat exchanger
21 Radiator expansion tank
22 Water pump
23 Thermostat
24 Radiator
36 Rear heating system heat exchanger

A Heater water return
B Heater water supply
C Vent line
D Coolant feed
E Coolant return

M Engine

A32/1y1 Rear heater water valve
M13/4 Circulation pump

Fuel Fired Auxilary Heating

- Variant of the stationary heater (STH)
  - HZ9 Water additional heater while driving (5kW)
  - H12 Water stationary heater (5kW)
  - HZ5 Tandem Water stationary heater (10kW)
  - H11 Warm air stationary heater
    - 3.5kW passenger / cargo van
    - 2 kW cab chassis
  - HY1 Radio remote control

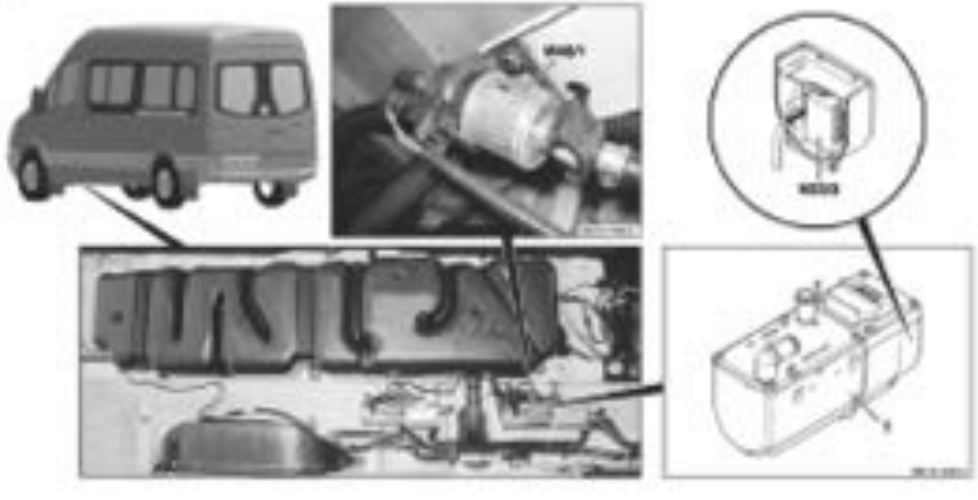

Water Heater While Driving 5kW (HZ9)

- Only be used with engine running
- Components installed under left floor in front of fuel tank
- Connected to engine coolant circuit
- Heater warms coolant up to 185°F (85°C) the switches off, restarts at 163°F (73°C)
- Activated via button below head lamp switch
- Driver can only switch on/off, no regulation

Water Stationary Heater 5kW (H12)

- Can be used without engine running
- Same components as HZ9 except:
  - Control module
  - Switches
  - Timer in IC
- Heater warms coolant up to 185°F (85°C) the switches off, restarts at 163°F (73°C)
- Activated via button below head lamp switch
- Timer in IC allows 3 preset times
- Driver can only switch on/off, no temp. regulation
- Max run time for MY10 = 60 minutes

1 Water stationary heater
2 Water stationary heater while driving

The switch has 2 LEDs (red/yellow):

Red	heater function active
Yellow	preset time active

Water Heater (HZ9 and H12)

- Conditions for switching On
  - Coolant temp < 176°F (80°C)
  - *Outside temp < 39°F (4°C) only for MY10*
  - Terminal 61 ON
- Start cycle
  - Combustion air blower, coolant recirculation pump and glow pin are activated when system switched On
  - Metering pump (delivers fuel to burner housing) actuated after a preheating time
  - Metering pump controlled via pulse generator in stationary heater control unit
  - If heater booster does not ignite with 90 sec. after fuel feed is started, the start cycle is repeated

Water Heater (HZ9 and H12)

- Conditions for switching OFF
  - Coolant temp > 176°F (80°C)
  - *Outside temp > 39°F (4°C) ONLY for MY10*
  - Terminal 61 OFF
  - Key turned position 0
- 120 sec run on time to cool combustion chamber
- Problems during heater operation
  - Under / over voltage
  - Flame-out
  - Overheating
  - Defective flame sensor
  - Defective temperature sensor
  - Fuel level in tank < 4 gallons (15 liters)

Water Heater (HZ9 and H12)

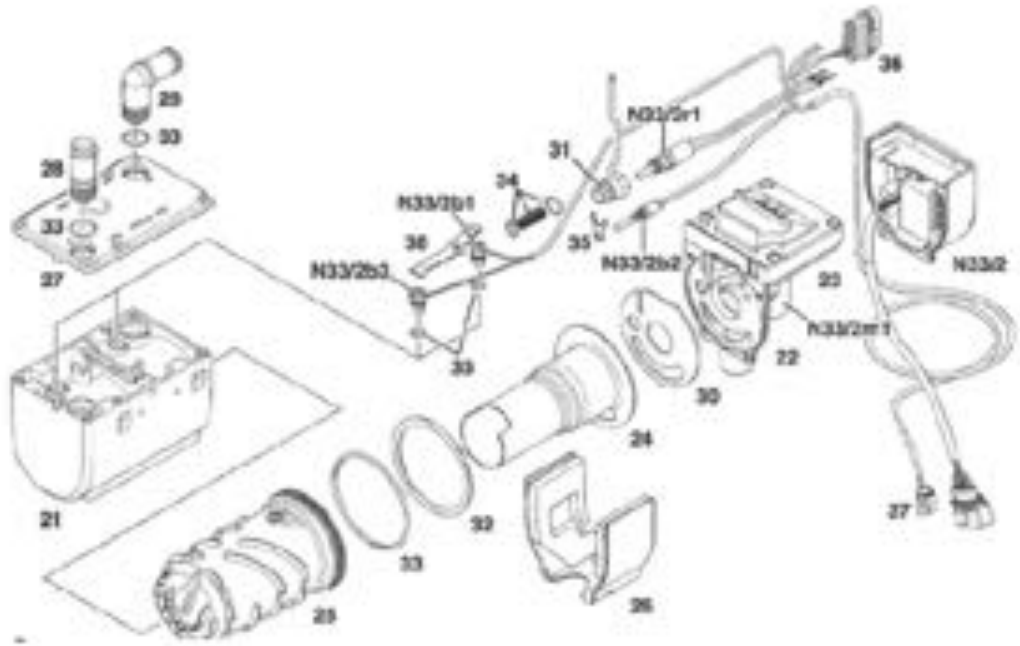

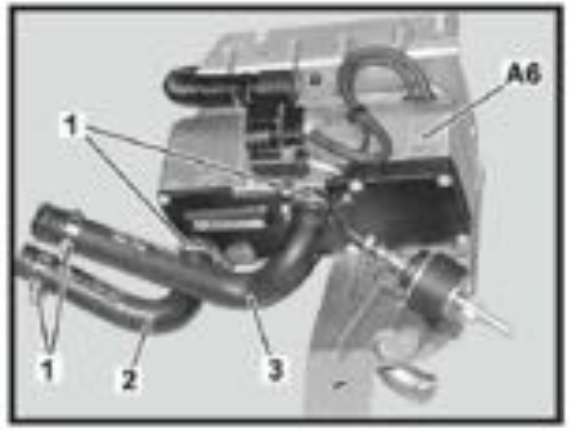

20 Heater booster unit
21 Casing
22 Combustion air blower with blower motor (N33/2m1)
23 Cover of combustion air blower with blower motor (N33/2m1) (22)
24 Combustor with downpipe
25 Heat exchanger
26 Cover of blower motor (N33/2m1)
27 Cover for casing (21)
28 Coolant inlet connection
29 Coolant outlet connection

32 Gasket between combustor with downpipe (24) and combustion air blower with blower motor (N33/2m1) (22)
33 O-ring
34 Soft trim with O-rings for the fitting of glow pin (N33/2r1) with fuel feed line (31)
35 Bracket for fitting of glow pin (N33/2r1) with fuel feed line (31)
36 14-pin connector for warm water auxiliary heater 2 control unit (N33/2)
37 Line for circulation pump (M13/4)

N33/2 Warm water auxiliary heater 2 control unit
N33/2b1 Temperature sensor
N33/2b2 Flame sensor
N33/2b3 Overheating sensor
N33/2m1 Blower motor
N33/2r1 Glow pin

HZ5 Tandem Water Stationary Heater (10kW)

- Two 5kW heater units connected in series
- Stationary heater mode = 5kW output
- Auxiliary heater mode while driving = 10kW output
- Max operating time:
  - 60 minutes MY10
  - 120 min MY09 and previously

Optional Remote Control for H12 / HZ5 (HY1)

- Can be used to switch on/off
  - Max distance 600 meters
- Max on time 60 minutes
- Will shut off if battery voltage drops below threshold
- Receiver mounted behind glove box

Warm Air Auxiliary Heater (H11)

- Located inside rear heater box
- Heats air inside box
- No CAN connection
- Programmed and activated timer mounted near OCP

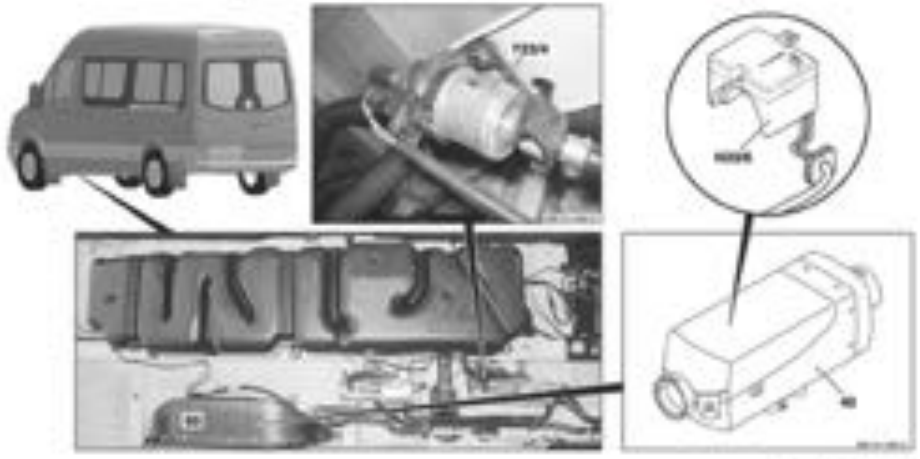

Acronyms

AAC	Automatic air conditioning control module
CAN	Controller Area Network
IC	Instrument cluster
OCP	Overhead control module
SAM	Signal Acquisition Module
PWM	Pulse width modulated

SRS

The SRS system consist of the following:

- SRS warning lamp
- Emergency tensioning retractors
  (R12/1, R12/2, R12/34)
- Belt force limiters
- Airbag control unit (N2/14 or N2/15)
- Airbags
  - airbags – Driver side
    (R12/3 via N80)
    Passenger side
    (R12/4)
- Window bags (R12/16, R12/17)
- Thorax bags (R12/32, R12/33)
- Side airbag sensors (A53, A54)
- Door pressure sensors (B48/7, B48/8)
- Driver's buckle switch (S68/1)

SRS

The driver and passenger side airbags are both single stage airbags

The SRS control unit is located below the center of the dash

SRS control unit:

- N2/14 – control unit with no Thorax bags
- N2/15 – control unit with Thorax bags

Side impact sensors (A53, A54) are located near the base of the B-pillars

Emergency Tensioning Retractors

There are three possible emergency tensioning retractors

- Driver side - R12/1
- Passenger side - R12/2
- Front center - R12/34

The retractor units include a belt force limiting device

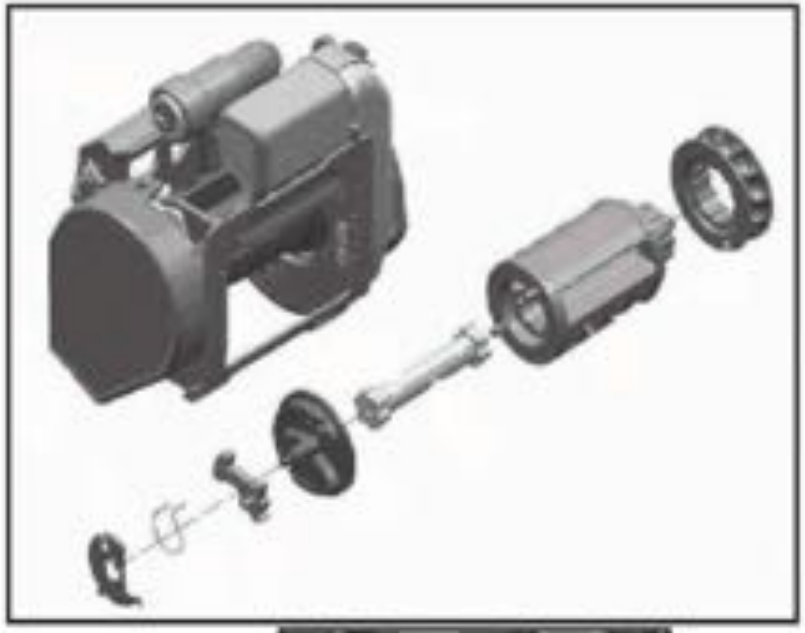

R12/34

Options

The window bag units (R12/16 and R12/17) are mounted in the A-pillars

The Thorax bags (1) are located in the outside edge of the front seats

With the side protection option, door pressure sensors (B48/7 and B48/8) are used as inputs

Repair Notes

Remove the ignition key prior to starting:

- bodywork
- work on airbag or ETRs (removal or installation)
- work associated with airbag or ETRs that involve electrical circuits (Example: removal of the steering wheel

Before welding:

- remove ignition key and disconnect the battery
- remove connector from the airbag control unit

Airbag and ETRs that have fallen from a height > 0.5 m must be replaced

Body

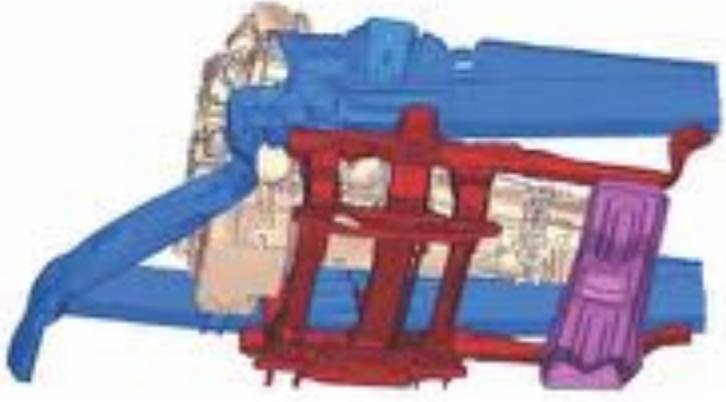

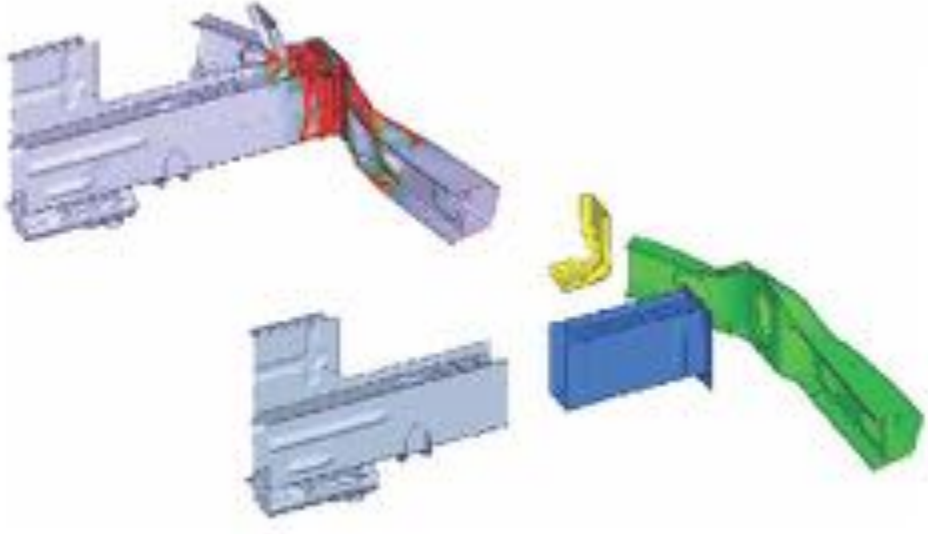

Repair Shoe

With light accidents, a so-called repair shoe (1) is available.

The repair shoe is slid on a longitudinal member, cut at a defined disconnection point, and welded.

This repair will be possible without a straightening bench.

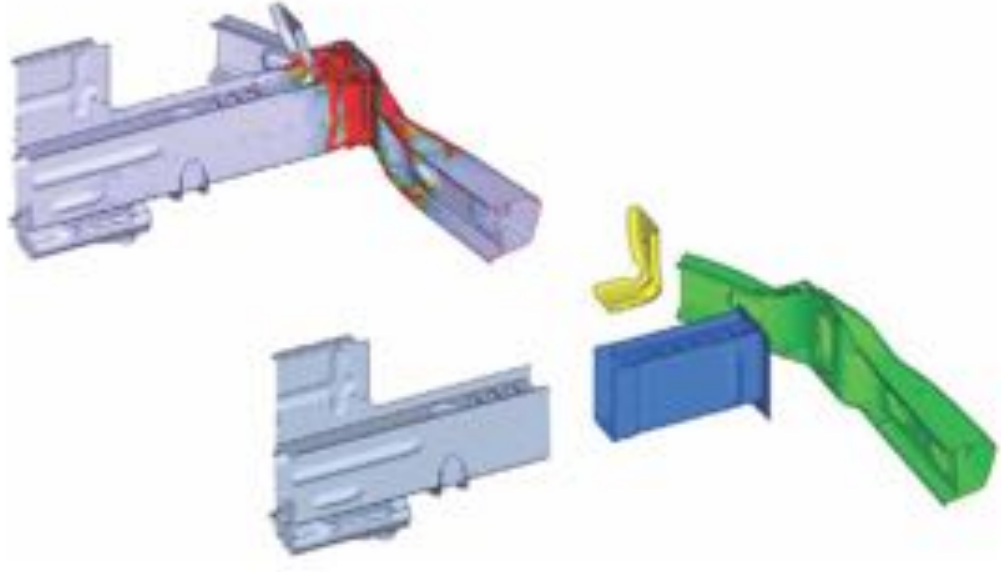

Special Features of the Front Axle Module

A main feature in a front-end crash is the "disconnectable" middle threaded connection of the front axle module, witch releases additional deformation zones in the longitudinal frame member when a particular force level is reached.

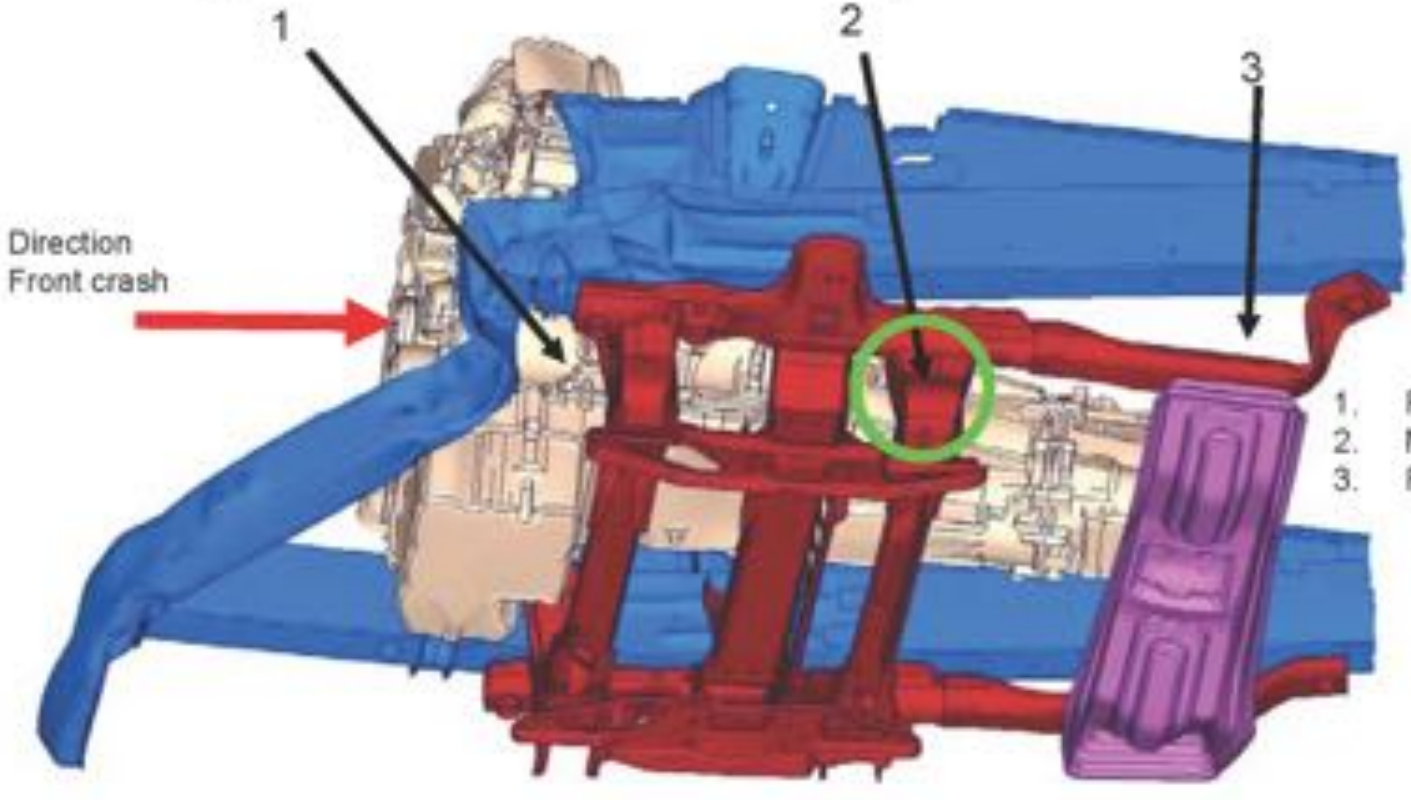

1. Front threaded connection
2. Middle threaded connection
3. Rear threaded connection

Sheet Metal Coatings

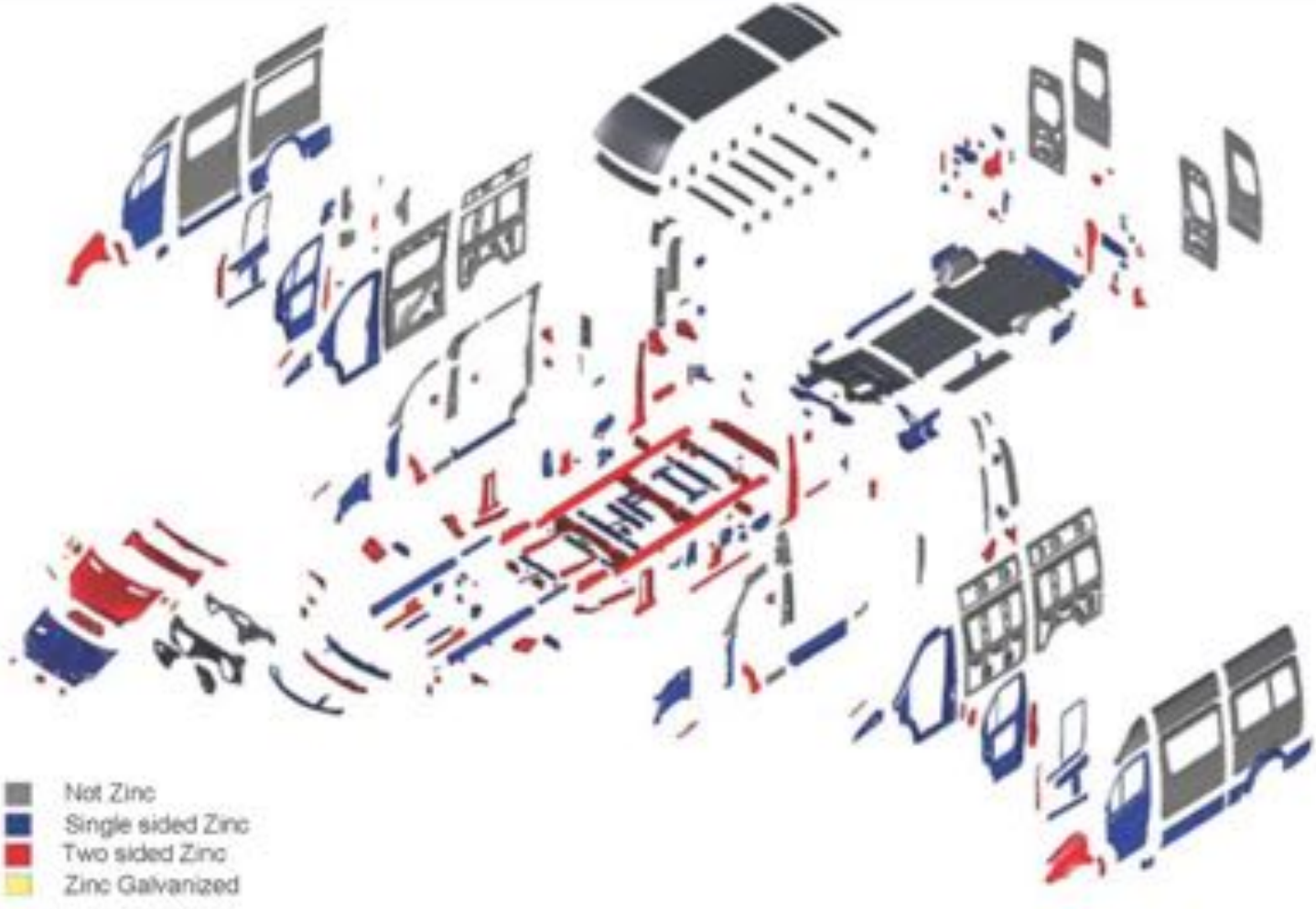

Sheet Metal Coatings

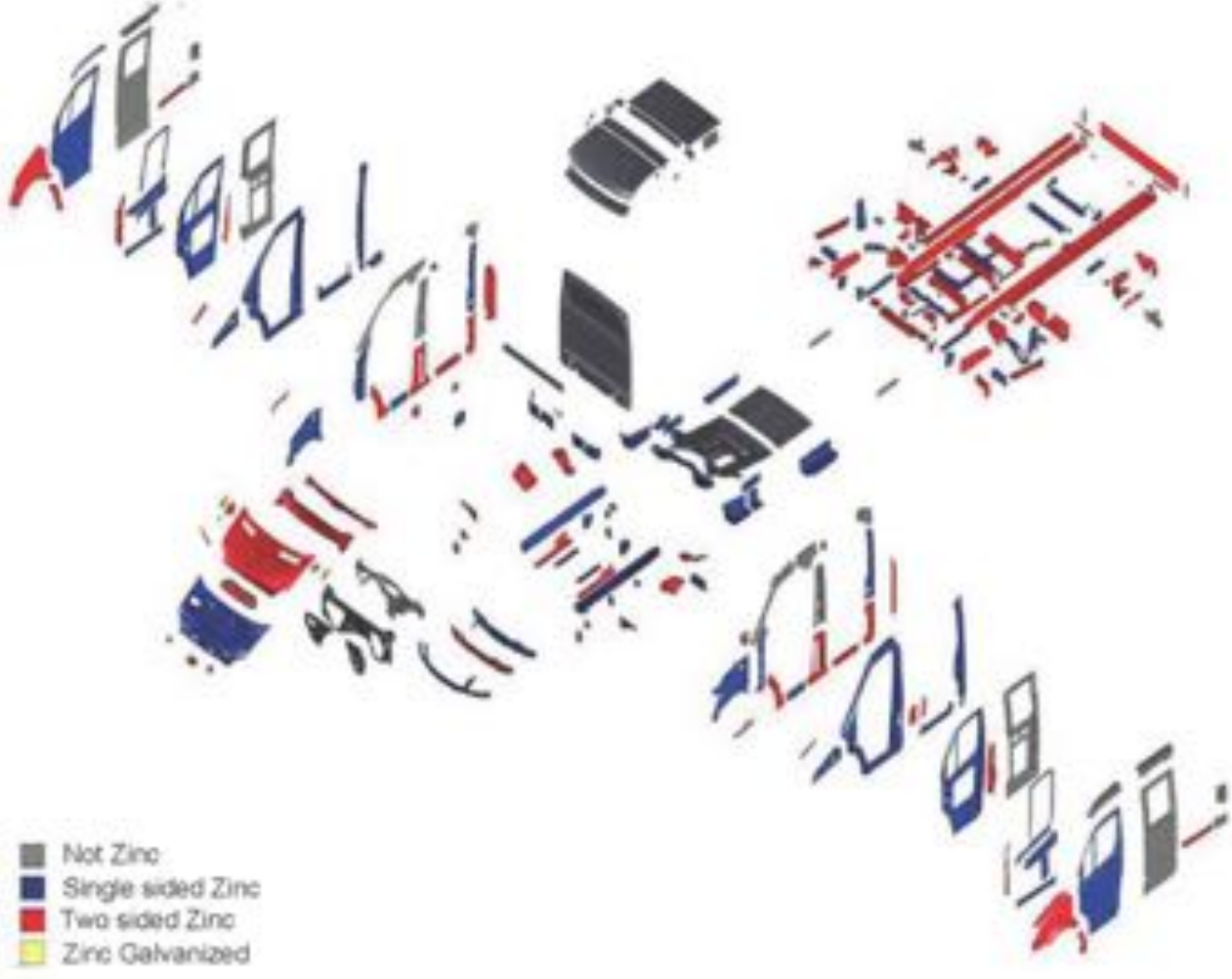

M272 Engine

Gasoline Engines M272

In addition to the familiar OM646 and OM642 diesel versions, a gasoline engine variant M272 is also available in the ***Sprinter*** model designation 906.
In the gasoline engine, the engine control unit (ME), is installed directly on the engine in contrast to the diesel variants.

Technical data for the M272 in the ***Sprinter*** model design **906**:

Engine model design:	272.979
Engine power:	190 kW at 5900 rpm
Engine torque	340 Nm (251 lb ft) from 2500 to 5000 rpm
Bore:	92.9 mm
Stroke:	86.0 mm
Total displacement:	3498 cm³
Compression ratio:	10.7:1
Cylinder arrangement:	6 cylinder V-engine with a 90° cylinder angle
Valves:	Two intake valves, two exhaust valves
Camshaft:	Variable valve timing (40°)
Combustion system:	Spark ignition, variable intake manifold
Injection system:	Multi-point injection
Engine control:	Electronic engine management system
Ignition coils:	One ignition coil per cylinder on the spark plug

Main Features

- Compact aluminum die-cast engine block with cast-in cylinder liners made of the new aluminum-silicon alloy SILITEC.
- Three-layer steel no-retorque cylinder head gaskets.
- A timing-chain-driven counter rotating balance shaft between the cylinder banks to offset the inertia forces which are an inherent in a V6 engine
- Four valve-per-cylinder design
- Valve train with cam followers and hydraulic, maintenance-free valve clearance compensation.
- The exhaust valves are sodium-filled.
- By means of fast-acting actuators, the intake and exhaust camshafts are continuously adjusted for flexible control of valve timing

Main Features

- Front duplex timing chain directly drives the overhead intake camshafts and the exhaust camshafts are driven by a pair of gears from the intake cams
- The oil filter and oil-water heat exchanger are mounted at the front of the engine
- Auxiliaries such as the alternator, coolant pump, power steering pump and refrigerant compressor (optional equipment) are driven by a poly-V-belt with an automatic tensioner.
- A sensor monitors the engine oil and warns if the level is too low.
- Electronically controlled internal exhaust gas recirculation
- Secondary air injection and two close-coupled catalytic converters ensure compliance with the LEV Bin8 emission regulations.

Main Features

- Full-load volumetric efficiency is ensured by a two-stage variable intake manifold, resulting in a smooth, continuous torque curve.
- Part-load volumetric efficiency is assisted by swirl flaps which retract fully into the side of the intake port, increasing turbulence in the cylinders for improved combustion.
- Coolant circulation while the engine is warming up is regulated by an electronically controlled thermostat, to further improve heating, exhaust emissions and fuel consumption.
- This engine requires premium fuel with minimum 90 octane posted at the pump.

Input Signals

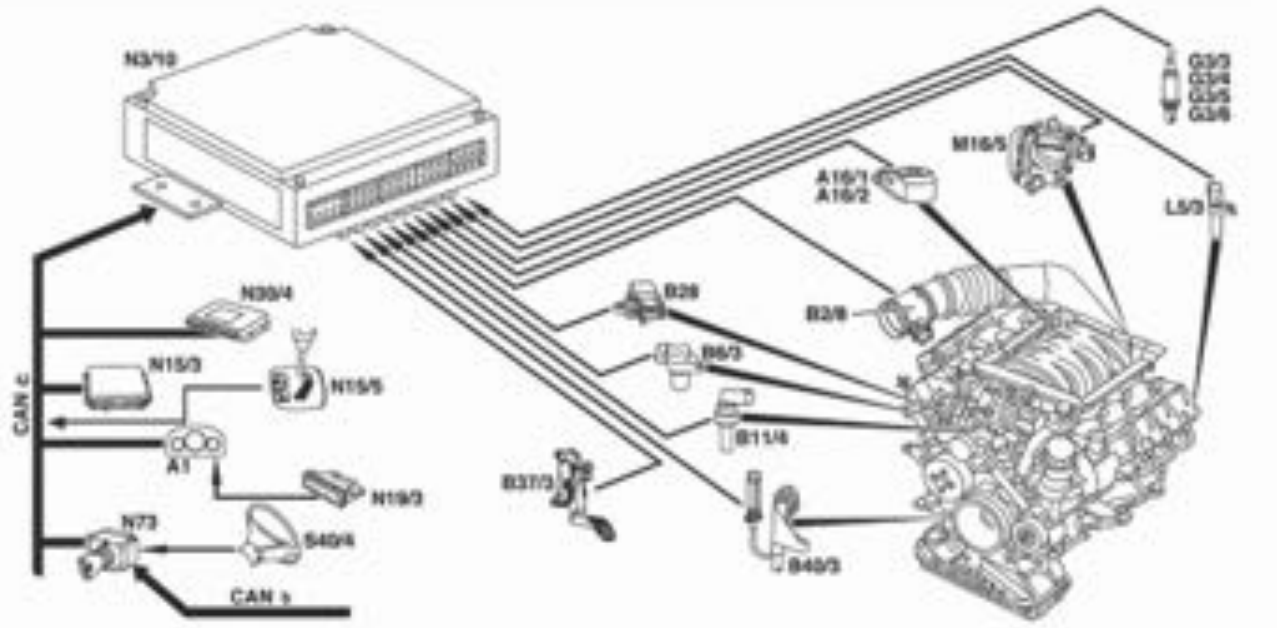

Legend

A1	Instrument cluster
A16/1	Knock sensor 1
A16/2	Knock sensor 2
B2/8	Hot film mass air flow sensor (HFM)
B6/3	Camshaft sensor
B11/4	Coolant temperature sensor
B28	Intake manifold pressure sensor
B37/3	Pedal value sensor
B40/3	Engine oil sensor
G3/3 - 6	Oxygen sensors
L5/3	Crankshaft position sensor
M16/5	Throttle valve setting sensor
N3/10	ME 2.8 control unit
N15/3	Electronic gearshift (EGS) control unit
N15/5	Electronic selector lever module control module (ESM)
N19/3	Climate control control unit (AAC)
N30/4	Electronic stability program (ESP) control unit
N73	Electronic ignition/starter switch (EIS) control unit
S40/4	Cruise control switch
CAN b	Interior bus (I-CAN)
CAN c	Engine bus (M-CAN)

Output Signals

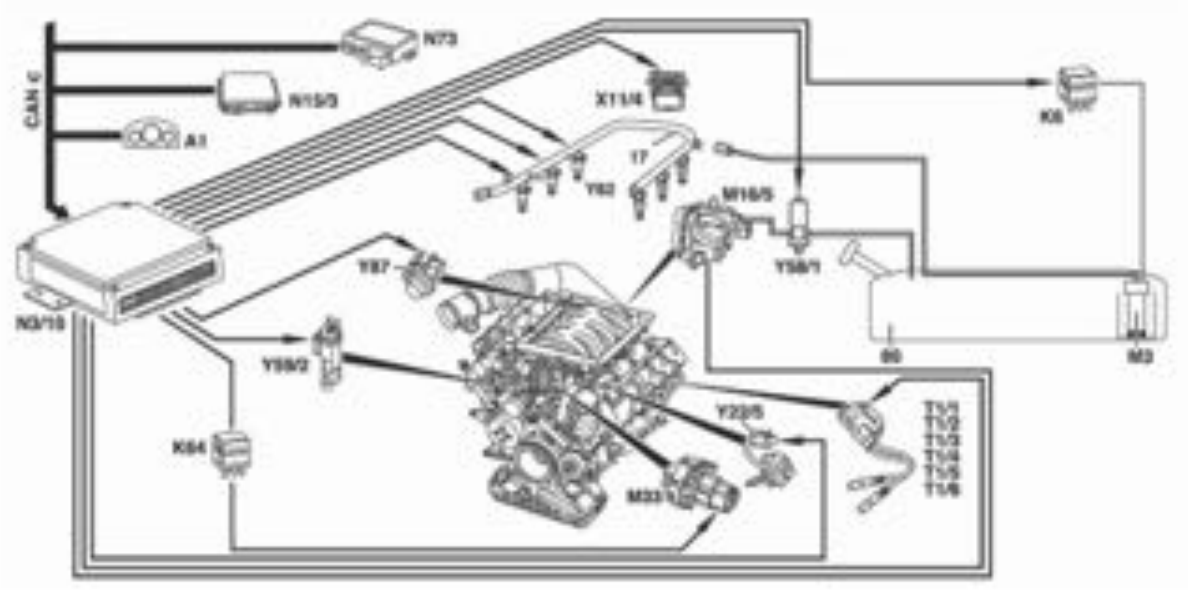

Legend

17	Fuel distributor rail
80	Fuel tank
A1	Instrument cluster
K6	Fuel pump relay
K64	Secondary air pump relay
M16/5	Throttle valve actuator
M3	Electric fuel pump
M33	Secondary air pump
N3/10	ME 2.8 control unit
N15/3	Electronic gearshift (EGS) control unit
N73	Electronic ignition/starter switch (EIS) control unit
T1/1 – 6	Ignition coils
X11/4	Diagnostic socket
Y22/5	Intake manifold switchover valve
Y58/1	Regeneration switchover valve
Y59/2	Secondary air switchover valve
Y62/1 – 6	Injection valves
Y87	Exhaust gas recirculation pressure transducer
CAN c	Engine bus (M-CAN)

Catalytic Converter

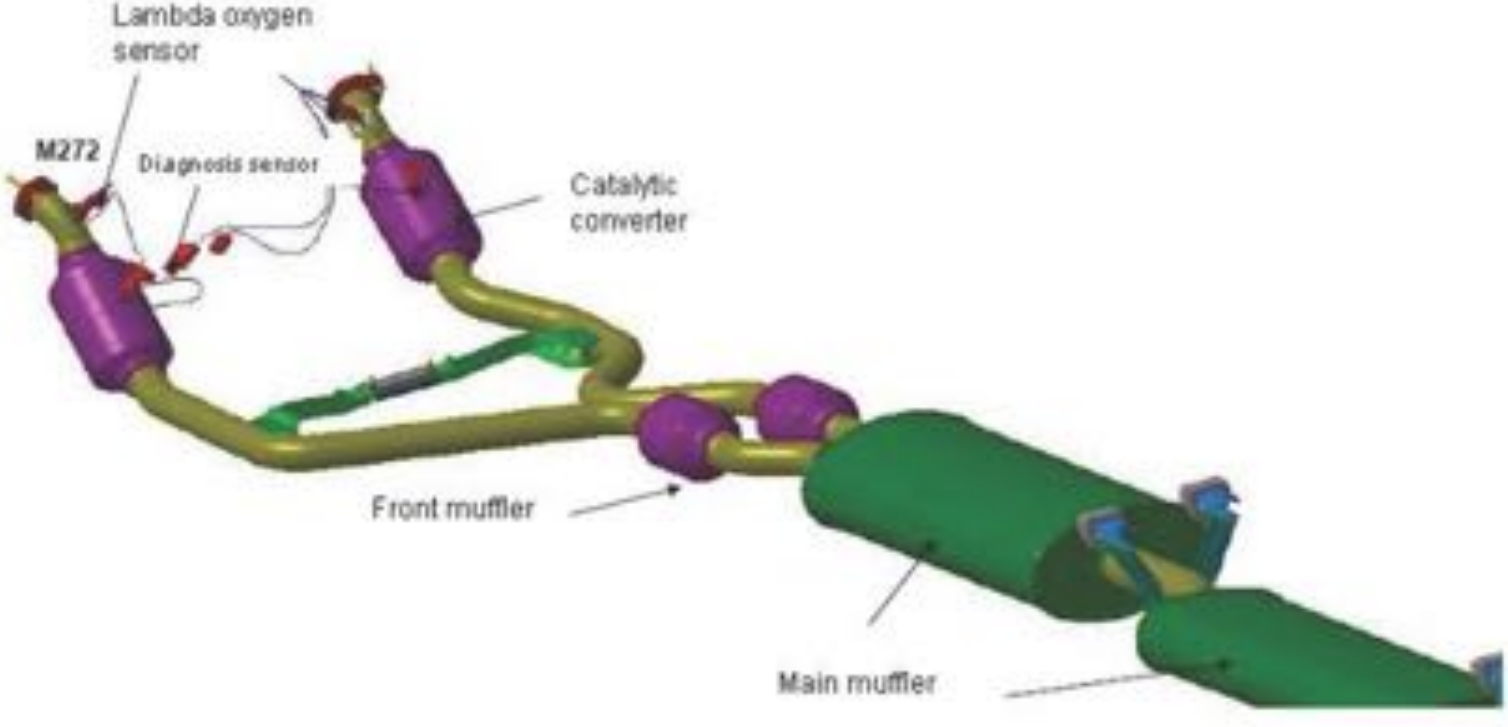

Variable Intake Manifold

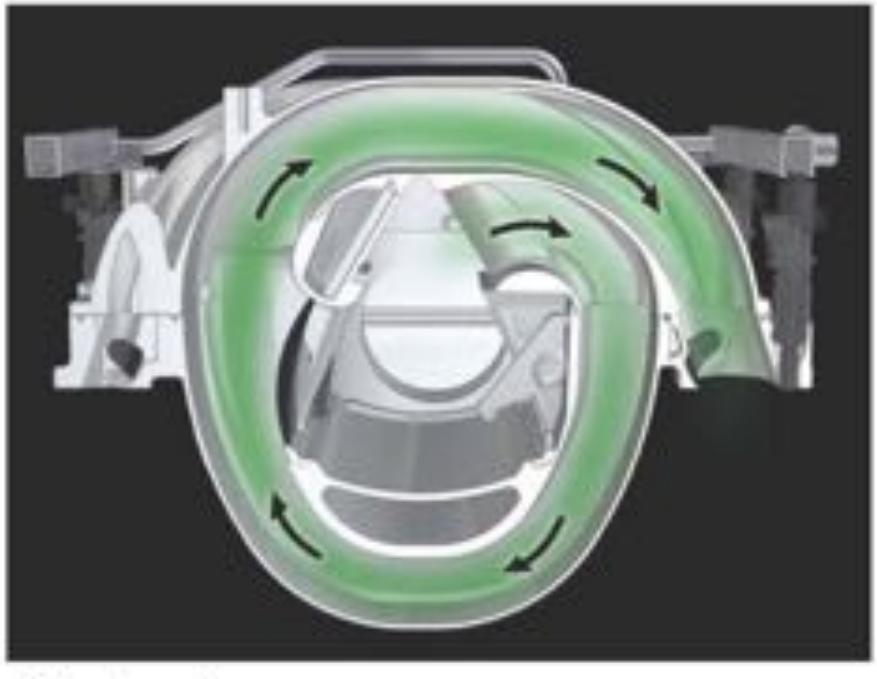

Short path
+ high rpm = high engine power

long path
+ low and middle rpm = high torque

Variable Intake Manifold

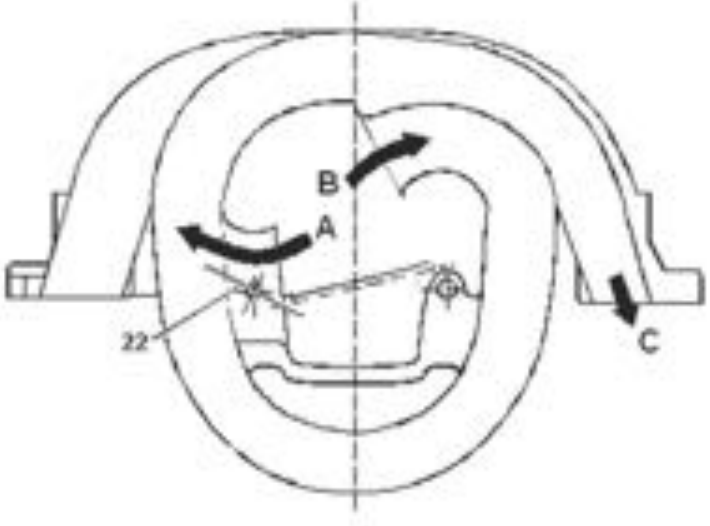

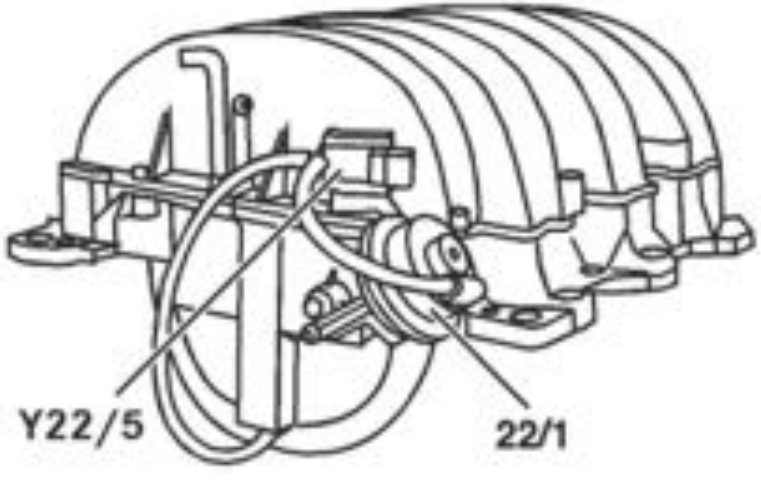

Legend

A	Short intake manifoldidle up to 1700 rpm
B	Long intake manifold 1700 to 3900 rpm
A	Short intake manifoldfrom 3900 rpm to maximum rpm
C	to cylinder (engine)
22	Flap
1	Vacuum tank
Y22/5	Variable intake manifold switchover valve
22/1	Vacuum cell

Oil Level Switch (S43)

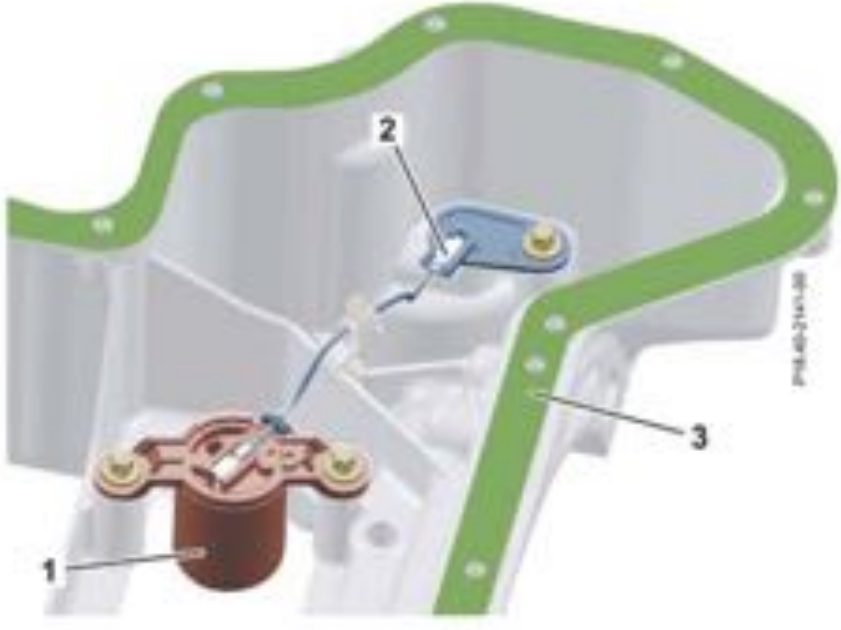

Oil level check switch (S43)

1. Float chamber
2. Plug contact
3. Oil pan bottom section sealing flange